DRAWING DESCRIPTION	DRAWING NUMBER	SHEET NO.	ISSUE NO.	ISSUE DATE	DRAWING STATUS				
					CANCELLED	PRELIMINARY	FOR CONSTRUCTION	AS BUILT	REFERENCE ONLY
SITE SPECIFIC NOTES - SHEET 1 OF 3	N109732	S0	9	12/08/26			✓		
SITE SPECIFIC NOTES - SHEET 2 OF 3	N109732	S0-1	7	12/08/26			✓		
SITE SPECIFIC NOTES - SHEET 3 OF 3	N109732	S0-2	3	12/08/26			✓		
SITE ACCESS AND LOCALITY PLAN	N109732	S1	10	12/08/26			✓		
ANTENNA LAYOUT - SHEET 1 OF 2	N109732	S1-1	10	12/08/26			✓		
ANTENNA LAYOUT - SHEET 2 OF 2	N109732	S1-2	10	12/08/26			✓		
SOUTH WEST ELEVATION	N109732	S3	10	12/08/26			✓		
ANTENNA CONFIGURATION TABLE	N109732	S3-1	10	12/08/26			✓		
SITE TENURE PLAN	N109732	G1	3	30/07/26			✓		
SITE EARTHING PLAN	N109732	G4	2	04/09/13					✓
ELECTRICAL SPECIFICATION	N109732	E0	4	22/05/19					✓
EQUIPMENT LAYOUT	N109732	E1	9	12/08/26			✓		
AC POWER - CONNECTION	N109732	E2	2	04/09/13					✓
DC POWER LINE DIAGRAM - SHEET 1 OF 2	N109732	E4	7	12/08/26			✓		
DC POWER LINE DIAGRAM - SHEET 2 OF 2	N109732	E4-1	3	12/08/26			✓		
45RU PATHFINDER RACK LAYOUT	N109732	E5	5	12/08/26			✓		
EQUIPMENT SHELTER FOOTINGS - SHEET 1 OF 2	N109732	H1	2	04/09/13					✓
EQUIPMENT SHELTER FOOTINGS - SHEET 2 OF 2	N109732	H1-1	2	04/09/13					✓
SECTOR 1 ANTENNA MOUNT DETAIL - SHEET 1 OF 4	N109732	T3	2	04/09/13					✓
SECTOR 1 ANTENNA MOUNT DETAIL - SHEET 2 OF 4	N109732	T3-1	2	04/09/13					✓
SECTOR 1 ANTENNA MOUNT DETAIL - SHEET 3 OF 4	N109732	T3-2	2	04/09/13					✓
SECTOR 1 ANTENNA MOUNT DETAIL - SHEET 4 OF 4	N109732	T3-3	2	04/09/13					✓
SECTOR 2 ANTENNA MOUNT DETAIL - SHEET 1 OF 2	N109732	T3-4	2	04/09/13					✓
SECTOR 2 ANTENNA MOUNT DETAIL - SHEET 2 OF 2	N109732	T3-5	2	04/09/13					✓
SECTOR 3 ANTENNA MOUNT DETAIL - SHEET 1 OF 3	N109732	T3-6	2	04/09/13					✓
SECTOR 3 ANTENNA MOUNT DETAIL - SHEET 2 OF 3	N109732	T3-7	2	04/09/13					✓
SECTOR 3 ANTENNA MOUNT DETAIL - SHEET 3 OF 3	N109732	T3-8	2	04/09/13					✓
RRU MOUNTING DETAILS - SHEET 1 OF 4	N109732	T3-9	3	22/01/19					✓
RRU MOUNTING DETAILS - SHEET 2 OF 4	N109732	T3-10	3	22/01/19					✓
RRU MOUNTING DETAILS - SHEET 3 OF 4	N109732	T3-11	3	22/01/19					✓
RRU MOUNTING DETAILS - SHEET 4 OF 4	N109732	T3-12	2	25/03/14					✓
EME BARRIER DETAILS	N109732	T3-13	2	22/09/20					✓
ANTENNA MOUNTING DETAILS - SHEET 1 OF 4	N109732	T3-14	1	12/08/26			✓		
ANTENNA MOUNTING DETAILS - SHEET 2 OF 4	N109732	T3-15	1	12/08/26			✓		

Telstra

BELLA VISTA 29-31 LEXINGTON DR

NODE MANAGER ADDRESS ID: 288399

ADDRESS: 29-31 LEXINGTON DRIVE
BELLA VISTA
NSW 2153

CYIENT

Level-14, 333 Collins Street, Melbourne, Victoria 3000 Australia
T +61 3 8605 4815 | www.cyient.com

UNAPPROVED DRAWING

ORDER	DRWN	CHKD	AMENDMENT	EXAM	APPD	DATE	ISS
NA13832.01	ES	ES	72204548-LTE1800-AS BUILT-WO1-ERIC	ES	BDB	25.03.14	5
NA15604.01	MH	AK	AS BUILT - 30051137W0029TELSTRA - LTE700	LY	CG	22.01.16	6
NA18834.01	MT	BJ	AS BUILT - 30069071W0430SSNC - LTE2100 / LTE2600	KV	DG	29.01.19	7
NA21224.01	KA	GM	FOR CONSTRUCTION - 30084105W0105CYI - NR3600	MB	JY	16.04.20	8
NA21224.01	CU	SK	AS BUILT - 30084105W0149CYI - NR3600	KSK	DG	22.09.20	9
NA28642.01	TE	MB	FOR CONSTRUCTION - 80005689WO224CYI - NR850/NR2600/NR3600	XX	XX	12.08.26	10

© Telstra Limited ACN 086 174 781 All rights reserved.

Telstra

MOBILE NETWORK SITE 288399
BELLA VISTA 29-31 LEXINGTON DR
DRAWING INDEX AND DOCUMENT CONTROL - SHEET 1 OF 3
29-31 LEXINGTON DRIVE, BELLA VISTA, NSW 2153

DWG NO. N109732 SHT NO. DC

DO NOT SCALE

A3

DRAWING DESCRIPTION	DRAWING NUMBER	SHEET NO.	ISSUE NO.	ISSUE DATE	DRAWING STATUS				
					CANCELLED	PRELIMINARY	FOR CONSTRUCTION	AS BUILT	REFERENCE ONLY
ANTENNA MOUNTING DETAILS - SHEET 3 OF 4	N109732	T3-16	1	12/08/26			✓		
ANTENNA MOUNTING DETAILS - SHEET 4 OF 4	N109732	T3-17	1	12/08/26			✓		
ANTENNA STAND-OFF DETAILS	N109732	T3-18	1	12/08/26			✓		
SECTOR-2 ANTENNA MOUNTING DETAILS	N109732	T3-19	1	12/08/26			✓		
SECTOR-3 ANTENNA MOUNTING DETAILS - SHEET 1 OF 4	N109732	T3-20	1	12/08/26			✓		
SECTOR-3 ANTENNA MOUNTING DETAILS - SHEET 2 OF 4	N109732	T3-21	1	12/08/26			✓		
SECTOR-3 ANTENNA MOUNTING DETAILS - SHEET 3 OF 4	N109732	T3-22	1	12/08/26			✓		
SECTOR-3 ANTENNA MOUNTING DETAILS - SHEET 4 OF 4	N109732	T3-23	1	12/08/26			✓		
CAGED ACCESS LADDER DETAIL - SHEET 1 OF 3	N109732	T8	2	04/09/13					✓
CAGED ACCESS LADDER DETAIL - SHEET 2 OF 3	N109732	T8-1	2	04/09/13					✓
CAGED ACCESS LADDER DETAIL - SHEET 3 OF 3	N109732	T8-2	2	04/09/13					✓
REMOVABLE BOLLARD DETAIL	N109732	T8-3	2	04/09/13					✓
STRUCTURAL CERTIFICATION - DESIGN ONLY PROJECT NO. NA13047.01	N109732	Z1	1	11/10/13					✓
STRUCTURAL AS BUILT CERTIFICATION PROJECT NO. NA13047	N109732	Z1-3	1	10/09/13					✓
STRUCTURAL CERTIFICATION - DESIGN ONLY PROJECT NO. NA13832.01	N109732	Z1-4	1	11/10/13					✓
STRUCTURAL AS BUILT CERTIFICATION PROJECT NO. NA13832.01	N109732	Z1-5	1	27/03/19					✓
AS BUILT STRUCTURAL & EME COMPLIANCE CERTIFICATION PROJECT NO. NA13832.01	N109732	Z1-6	1	30/10/14					✓
STRUCTURAL DESIGN CERTIFICATION PROJECT NO. NA15604.01	N109732	Z1-7	1	22/06/16					✓
STRUCTURAL AS BUILT CERTIFICATION PROJECT NO. NA15604.01	N109732	Z1-8	1	19/08/16					✓
AS BUILT STRUCTURAL AND EME COMPLIANCE CERTIFICATION PROJECT NO. NA15604.01	N109732	Z1-9	1	10/06/17					✓
STRUCTURAL CERTIFICATION - DESIGN ONLY PROJECT NO. NA18834.01	N109732	Z1-10	1	18/04/19					✓
AS BUILT CONSTRUCTION CERTIFICATION PROJECT NO. NA18834.01	N109732	Z1-11	1	02/05/19					✓
AS BUILT STRUCTURAL COMPLIANCE CERTIFICATION PROJECT NO. NA18834.01	N109732	Z1-12	1	26/04/19					✓
STRUCTURAL DESIGN CERTIFICATION (F01) PROJECT NO. NA21224.01	N109732	Z1-13	1	16/04/20					✓
AS BUILT CONSTRUCTION CERTIFICATION (F02) PROJECT NO. NA21224.01	N109732	Z1-14	1	22/09/20					✓
AS BUILT STRUCTURAL & EME COMPLIANCE CERTIFICATION (F04) PROJECT NO. NA21224.01	N109732	Z1-15	1	22/09/20					✓
STRUCTURAL DESIGN CERTIFICATION PROJECT NO. NA29365.01	N109732	Z1-16	1	12/08/26			✓		

Telstra

BELLA VISTA 29-31 LEXINGTON DR

NODE MANAGER ADDRESS ID: 288399

ADDRESS: 29-31 LEXINGTON DRIVE
BELLA VISTA
NSW 2153

CYIENT

Level-14, 333 Collins Street, Melbourne, Victoria 3000 Australia
T +61 3 8605 4815 | www.cyient.com

UNAPPROVED DRAWING

ORDER	DRWN	CHKD	AMENDMENT	EXAM	APPD	DATE	ISS
NA13832.01	ES	ES	72204548-LTE1800-AS BUILT-WO1-ERIC	ES	BDB	25.03.14	4
NA15604.01	MH	AK	AS BUILT - 30051137W0029TELSTRA - LTE700	LY	CG	22.01.16	5
NA18834.01	MT	BJ	AS BUILT - 30069071W0430SSNC - LTE2100 / LTE2600	KV	DG	29.01.19	6
NA21224.01	KA	GM	FOR CONSTRUCTION - 30084105W0105CYI - NR3600	MB	JY	16.04.20	7
NA21224.01	CU	SK	AS BUILT - 30084105W0149CYI - NR3600	KSK	DG	22.09.20	8
NA28642.01	TE	MB	FOR CONSTRUCTION - 80005689WO224CYI - NR850/NR2600/NR3600	XX	XX	12.08.26	9

© Telstra Limited ACN 086 174 781 All rights reserved.

Telstra

MOBILE NETWORK SITE 288399
BELLA VISTA 29-31 LEXINGTON DR
DRAWING INDEX AND DOCUMENT CONTROL - SHEET 2 OF 3
29-31 LEXINGTON DRIVE, BELLA VISTA, NSW 2153

DWG NO. N109732 SHT NO. DC-1

DO NOT SCALE

A3

BELLA VISTA 29-31 LEXINGTON DR

NODE MANAGER ADDRESS ID: 288399

ADDRESS: 29-31 LEXINGTON DRIVE
BELLA VISTA
NSW 2153

DRAWING DESCRIPTION	DRAWING NUMBER	SHEET NO.	ISSUE NO.	ISSUE DATE	DRAWING STATUS				
					CANCELLED	PRELIMINARY	FOR CONSTRUCTION	AS BUILT	REFERENCE ONLY
REFERENCE DRAWINGS:									
STANDARD CONSTRUCTION NOTES	017866P05	1	3	10/01/23			✓		
CABLE LADDER FIXING DETAILS	017866P56	1	1	12/05/08					✓
HORIZONTAL GANTRY ON CONCRETE SLAB CONFIGURATION	017866P62	1	1	28/05/09					✓
HUT AC POWER LINE SCHEMATIC ICS Mk3.2 SHELTER	017866P122	2	3	29/03/10					✓
EQUIPMENT ALARM CONFIGURATION	017866P123	1	3	17/07/23			✓		
DC POWER LINE DIAGRAM ICS Mk3.2 SHELTER - SP18 POWER SYSTEM	017866P124	3	3	14/08/12					✓
MOBILE NETWORK SITE STANDARD DRAWING RBS6601 DONOR RACK LAYOUTS	017866P131	9	3	23/01/23					✓
MOBILE NETWORK SITE STANDARD DRAWING RBS6202 STANDARD RACK LAYOUT	017866P131	10	2	14/03/13					✓
RRU POWER AND EARTHING SP18 POWER SYSTEM & DC-DC CONVERTERS - 3 PHASE SITES	017866P134	3	3	25/0123					✓
ELECTRICAL SPECIFICATION	017866P160	1	5	03/02/23			✓		
DETAILS & CONNECTIONS GALVANISED STEEL BASED SYSTEM	017866P201	1	2	14/04/15					✓
CONNECTION METHOD TO BUILDING REINFORCEMENT	017866P201	4	1	15/03/11					✓
EARTHING OF FEEDERS WITHIN ROOFTOP FEEDER TRAY	017866P201	7	2	18/03/15					✓
FEEDER EARTHING DETAILS	017866P201	11	3	29/03/23					✓
RRU FEEDER EARTHING - RFS CABLES	017866P201	12	3	27/09/13					✓
INTERNAL EARTHING DETAIL	017866P201	13	5	29/03/23					✓
TYPICAL FEEDER EARTH BAR DETAILS	017866P201	18	1	19/10/11					✓

CYIENT
Level-14, 333 Collins Street, Melbourne, Victoria 3000 Australia
T +61 3 8605 4815 | www.cyient.com

UNAPPROVED DRAWING

ORDER	DRWN	CHKD	AMENDMENT	EXAM	APPD	DATE	ISS
NA28642.01	TE	MB	FOR CONSTRUCTION - 80005689WO224CYI - NR850/NR2600/NR3600	XX	XX	12.08.26	1

© Telstra Limited ACN 086 174 781 All rights reserved.

MOBILE NETWORK SITE 288399
BELLA VISTA 29-31 LEXINGTON DR
DRAWING INDEX AND DOCUMENT CONTROL - SHEET 3 OF 3
29-31 LEXINGTON DRIVE, BELLA VISTA, NSW 2153

DWG NO. N109732 SHT NO. DC-2

DO NOT SCALE

A3

SITE SPECIFIC NOTES

EQUIPMENT SHELTER

TYPE: EXISTING TELSTRA NATIONAL STANDARD ICS 3.2 SHELTER
COLOUR: PAPERBARK
FEEDER ENTRY WINDOW: FLOOR HATCH
AIR CONDITIONING CAGE: NO
REFERENCE DRAWING: SHEET E1

STRUCTURE

TYPE: EXISTING BUILDING ROOFTOP
HEIGHT: 23.70m (UPTO TOP OF FIRE STAIR ROOF SLAB)
COLOUR: NATURAL BRICK
REFERENCE DRAWING: SHEET S3

ANTENNA ACCESS

TELSTRA: VIA STEP PEGS WITH DOUBLE LANYARD ATTACHMENT
OTHERS: N/A

ANTENNA MOUNTS

TELSTRA: PROPOSED AND EXISTING TELSTRA STEEL MOUNTS
COLOUR: GALVANISED FINISH
REFERENCE DRAWING: SHEETS T3 TO T3-18

12

ENVIRONMENTAL ISSUES

REFER TO ENVIRONMENTAL RISK ASSESSMENT PROCEDURE DOCUMENT NUMBER: 018502

EARTHING DETAIL

EXISTING EARTHING SYSTEM UTILISED. THE EARTHING WORKS COMPLY WITH TELSTRA DOCUMENT 017866a07. EXISTING FEEDERS ARE CONNECTED TO EARTHING SYSTEM TO 017866P201 SHEET 11.

POWER SUPPLY

EXISTING AC POWER SUPPLY (3 PHASE / 63 AMPS).
DIAL 1100 BEFORE YOU DIG.

PROPERTY SIGNAGE

EXISTING PROPERTY SIGNAGE AS PER DOCUMENT 017866A12. PROPERTY SIGN INCLUDES RFNSA SITE NUMBER. SITE NAME: BRANDED SITE IDENTIFICATION REGULAR (BSr). TELSTRA S/I NUMBER 187/00929. JABAC PART NUMBER TFMS929-M.

SITE ACCESS

VIA 29-31 LEXINGTON DRIVE, BELLA VISTA, NSW 2153.
REFER SHEET S1 FOR DETAILS.

SITE SIGNAGE

ALL EME SIGNAGE IS REFERENCED ON DRAWINGS S1, S1-1, S1-2 & S3.
REFER TO DOCUMENT 005486 FOR DETAILS.

GENERAL NOTES

1. ALL DIMENSIONS ARE IN MILLIMETRES UNLESS SPECIFIED OTHERWISE.
2. CABLES AND ALL ACCESS POINTS ON THE STRUCTURE MUST BE BIRD PROOFED IN ACCORDANCE WITH THE METHODS SPECIFIED IN DOCUMENT NO. 003615 EXTERNAL PLANT STANDARDS FOR MOBILE BASE STATIONS, SECTION 6.3.3.
3. SERVICES, WHERE SHOWN ARE INDICATIVELY ONLY. LOCATION OF ALL RELEVANT EXISTING SERVICES SHALL BE IDENTIFIED AND CONFIRMED PRIOR TO COMMENCING WORK. THE CONTRACTOR TO LIAISE WITH RELEVANT AUTHORITIES FOR DIRECTIONS AND PERMITS REQUIRED. DIAL 1100 BEFORE YOU DIG AND LOCATE ALL UNDERGROUND SERVICES PRIOR TO ANY EXCAVATION WORK.
4. FEEDER CONNECTION DETAILS, ELECTRICAL AND MECHANICAL TILTS ARE TO BE OBTAINED FROM CANRAD REPORTS.
5. CONSTRUCTORS ARE TO BE AWARE OF TELSTRA DOCUMENT 007338-C8-11 AND IN PARTICULAR CLAUSE 7.3 & 10.3 WHICH DESCRIBES REQUIREMENTS PERSONNEL MUST UNDERTAKE IN RESPECT TO ASBESTOS MANAGEMENT AT TELSTRA FACILITIES.
6. THE LOCATION AND DEPTH OF ANY EXISTING UNDERGROUND SERVICES SHALL BE PHYSICALLY VERIFIED ON SITE PRIOR TO COMMENCING EXCAVATION (e.g. BY POTHOLING).

SITE REFERENCE DETAILS

OCCUPIER	SITE NAME	SITE CODE
TELSTRA	BELLA VISTA 29-31 LEXINGTON DR	288399
OPTUS	BELLA VISTA - O	S6004
OPTUS VODAFONE JOINT VENTURE	BELLA VISTA - O	JS6860
VODAFONE	BELLA VISTA - O	240125
RFNSA SITE NUMBER - 2153032 STRUCTURE OWNER - PRIVATE OWNER		

SERVICES LEGEND

- T — OPTIC FIBRE ABOVE GROUND
- T — OPTIC FIBRE BELOW GROUND
- E — ABOVE GROUND ELECTRICAL SUPPLY
- E — BELOW GROUND ELECTRICAL SUPPLY
- G — GAS SUPPLY
- HV — HIGH VOLTAGE ELECTRICAL SUPPLY
- W — WATER SUPPLY
- S — SEWER LINE
- SW — STORM WATER
- FE — ABOVE GROUND FEEDER CABLES
- FE — BELOW GROUND FEEDER CABLES
- X / AX — DENOTES PROPOSED TELSTRA ANTENNA SECTOR AS SHOWN ON SHEETS S1-1 & S1-2

UNAPPROVED DRAWING

COMPLIANCE BOX
COMPLETED AS PER DESIGN ☐
ALTERATIONS IN RED ☐
NAME (PRINT)
SIGNATURE DATE

NOTE: THIS DRAWING TO BE READ IN CONJUNCTION WITH SHEETS S0-1 & S0-2

9 FOR CONSTRUCTION

DO NOT SCALE

CYIENT
Level-14, 333 Collins Street, Melbourne, Victoria 3000 Australia
T +61 3 8605 4815 | www.cyient.com

ORDER	DRWN	CHKD	AMENDMENT	EXAM	APPD	DATE	ISS
NA13832.01	ES	ES	72204548-LTE1800-AS BUILT-WO1-ERIC	ES	BDB	25.03.14	4
NA15604.01	MH	AK	AS BUILT - 30051137W0029TELSTRA - LTE700	LY	CG	22.01.16	5
NA18834.01	MT	BJ	AS BUILT - 30069071W0430SSNC - LTE2100 / LTE2600	KV	DG	29.01.19	6
NA21224.01	KA	GM	FOR CONSTRUCTION - 30084105W0105CYI - NR3600	MB	JY	16.04.20	7
NA21224.01	CU	SK	AS BUILT - 30084105W0149CYI - NR3600	KSK	DG	22.09.20	8
NA28642.01	TE	MB	FOR CONSTRUCTION - 80005689WO224CYI - NR850/NR2600/NR3600	XX	XX	12.08.26	9

© Telstra Limited ACN 086 174 781 All rights reserved.

Telstra

MOBILE NETWORK SITE 288399
BELLA VISTA 29-31 LEXINGTON DR
SITE SPECIFIC NOTES - SHEET 1 OF 3
29-31 LEXINGTON DRIVE, BELLA VISTA, NSW 2153

DWG NO. N109732 SHT NO. S0

A3

EQUIPMENT NOTES - PROJECT NO. NA28642.01

ITEM	EQUIPMENT	EQUIPMENT DETAILS	EXISTING	PROPOSED	TOTAL	REFERENCE DWG
1	45RU PATHFINDER RACK	530 x 530 x 2200mm (W,D,H)	2	-1	1	SHEETS E1 & E5
2	DECON RACK FOR RADIO 4490HP	600 x 600 x 2200mm (W,D,H)	0	1	1	SHEETS E1 & E5
3	ELTEK SP18-HC (PSU)	600 x 600 x 2200mm (W,D,H)	1	0	1	SHEETS E1 & E4
4	ELTEK SP18-HC RECTIFIERS	FP2 HE 2kW	4	0	4	SHEETS E1 & E4
5	ELTEK SP18-HC BATTERY STRINGS	YUASA FHX190-12S, BATTERY RESERVE TIME 1 HR	1	0	1	SHEETS E1 & E4
6	ELTEK SP18-RRU (PSU)	600 x 600 x 2201mm (W,D,H)	1	0	1	SHEETS E1 & E4-1
7	ELTEK SP18-RRU RECTIFIERS	FP2 HE 2kW	5	0	5	SHEETS E1 & E4-1
8	ELTEK SP18-RRU BATTERY STRINGS	YUASA FHX190-12S, BATTERY RESERVE TIME 1 HR	2	0	2	SHEETS E1 & E4-1
9	ENATEL DC-DC UNIT	325 x 483 x 133mm (W,D,H)	1	0	1	SHEET E1
10	ENATEL DC-DC CONVERTER	CM1748-48 MODULES	4	0	4	SHEET E1
11	ERICSSON DCDU	TO BE INSTALLED IN 45RU PATHFINDER RACK RT/2/2	0	1	1	SHEETS E1 & E5
12	KEREM A100 PDP	TO BE INSTALLED IN DECON RACK RT/2/4	0	1	1	SHEETS E1 & E5
13	KEREM A100 CB 40A	KT-APX-50KA-MTRS-40A	0	3	3	SHEETS E1 & E5
14	ERICSSON RBS6202	500 x 525 x 568mm (W,D,H)	2	-1, 1 (SPARE)	1	SHEETS E1 & E5
15	ERICSSON RP6672 (LTE700/LTE850/NR850/LTE1800/LTE2100/LTE2600	TO BE INSTALLED IN 45RU PATHFINDER RACK RT/2/2	0	1	1	SHEETS E1 & E5
16	ERICSSON BB6630	INSTALLED IN 45RU PATHFINDER RACK RT/2/2	1	-1	0	SHEETS E1 & E5
17	ERICSSON R503 DIGITAL UNIT	INSTALLED IN 45RU PATHFINDER RACK RT/2/2	2	-2	0	SHEETS E1 & E5
18	ERICSSON ROUTER 6675	INSTALLED IN 45RU PATHFINDER RACK RT/2/2	1	0	1	SHEETS E1 & E5
19	ERICSSON RBS6601	INSTALLED IN 45RU PATHFINDER RACKS	1	-1	0	SHEET E1
20	BB5216	INSTALLED IN RBS6202	1	-1	0	SHEET E5
21	ERICSSON SITE INTEGRATION UNIT (SIU)	INSTALLED IN 45RU PATHFINDER RACK	1	0	1	SHEET E1
22	ERICSSON DUW 30 01	INSTALLED IN RBS6601	1	-1	0	SHEET E1
23	FIBRE PATCH PANEL	INSTALLED IN 45RU PATHFINDER RACK RT/2/2	1	0	1	SHEETS E1 & E5
24	CABLE GUIDE	INSTALLED IN 45RU PATHFINDER RACK RT/2/2	4	0	4	SHEETS E1 & E5
25	FIBRE MANAGEMENT TRAY	INSTALLED IN 45RU PATHFINDER RACK RT/2/2	1	0	1	SHEETS E1 & E5
26	SLIDE OUT FIBRE MANAGEMENT TRAY	TO BE INSTALLED IN 45RU PATHFINDER RACK RT/2/2	0	2	2	SHEETS E1 & E5
27	4490 ADAPTOR SHELVES	TO BE INSTALLED IN DECON RGL-091 RACK AT RT/2/4	0	3	3	SHEETS E1 & E5
28	ELTEK INTERNAL SURGE PROTECTION DEVICE (12.2 WAY)	IN EQUIPMENT SHELTER AT RT/1/4 WALL MOUNTED	1	-1	0	SHEET E1
29	VERTIV 12.3 WAY EXTERNAL SPD BOX	600 x 200 x 600mm (W,D,H) WALL MOUNTED	1	0	1	SHEET E1
30	RRU INTERFACE JUNCTION BOX	4P16F	3	-3	0	SHEETS S1-2 & S3
31	W&B RRU INTERFACE JUNCTION BOX	W&B 8P24F (TC4039 MOBILE 08)	3	0	3	SHEETS S1-2 & S3
32	ERICSSON RADIO 4443 (B1 B3) LTE2100 / LTE1800	335 x 284 x 380mm (W,D,H) NATURAL PRODUCT COLOUR	3	-3	0	SHEETS S1-2 & S3

UNAPPROVED DRAWING

COMPLIANCE BOX
COMPLETED AS PER DESIGN ☐
ALTERATIONS IN RED ☐
NAME (PRINT)
SIGNATURE DATE

NOTE: THIS DRAWING TO BE READ IN CONJUNCTION WITH SHEETS S0 & S0-2

FOR CONSTRUCTION

DO NOT SCALE

CYIENT
Level-14, 333 Collins Street, Melbourne, Victoria 3000 Australia
T +61 3 8605 4815 | www.cyient.com

ORDER	DRWN	CHKD	AMENDMENT	EXAM	APPD	DATE	ISS
NA13832.01	ES	ES	72204548-LTE1800-AS BUILT-WO1-ERIC	ES	BDB	25.03.14	2
NA15604.01	MH	AK	AS BUILT - 30051137W0029TELSTRA - LTE700	LY	CG	22.01.16	3
NA18834.01	MT	BJ	AS BUILT - 30069071W0430SSNC - LTE2100 / LTE2600	KV	DG	29.01.19	4
NA21224.01	KA	GM	FOR CONSTRUCTION - 30084105W0105CYI - NR3600	MB	JY	16.04.20	5
NA21224.01	CU	SK	AS BUILT - 30084105W0149CYI - NR3600	KSK	DG	22.09.20	6
NA28642.01	TE	MB	FOR CONSTRUCTION - 80005689WO224CYI - NR850/NR2600/NR3600	XX	XX	12.08.26	7

© Telstra Limited ACN 086 174 781 All rights reserved.

Telstra

MOBILE NETWORK SITE 288399
BELLA VISTA 29-31 LEXINGTON DR
SITE SPECIFIC NOTES - SHEET 2 OF 3
29-31 LEXINGTON DRIVE, BELLA VISTA, NSW 2153

DWG NO. N109732 SHT NO. S0-1

A3

EQUIPMENT NOTES - PROJECT NO. NA28642.01

ITEM	EQUIPMENT	EQUIPMENT DETAILS	EXISTING	PROPOSED	TOTAL	REFERENCE DWG
33	ERICSSON RRUS-32 B7 (LTE2600)	306 x 178 x 690mm (W,D,H) NATURAL PRODUCT COLOUR	3	-3	0	SHEETS S1-1 & S3
34	ERICSSON RADIO 4485 (B3/B1/B7) LTE1800/LTE2100/NR/LTE2600	533 x 398 x 145mm (W,D,H) NATURAL PRODUCT COLOUR	0	3	3	SHEETS S1-2 & S3
35	ERICSSON RADIO 4490HP (B28/B26) (LTE700/LTE850/NR850)	397 x 165 x 522mm (W,D,H) NATURAL COLOUR	0	3	3	SHEETS E1 & E5
36	RUS02 B28	INSTALLED IN RBS6202 RT/2/2	6	6 (SPARE)	6	SHEETS E1 & E5
37	RUS02 B5	INSTALLED IN RBS6202 RT/2/4	3	-3	0	SHEET E1
38	KAELUS COMBINER	DBC0086F1V1-1 INSTALLED WITHIN PATHFINDER RACK AT RT/2/2	3	3 (SPARE)	3	SHEETS E1 & E5
39	TRIASX DUAL DUPLEX FILTER (WCDMA850)	DDF0035F1V1	3	3 (SPARE)	3	SHEET E1
40	KAELUS KA-6035 FILTER	TO BE INSTALLED WITHIN PROPOSED DECON RACK AT RT/2/3	0	3	3	SHEETS E1 & E5
41	KAELUS TOWER MOUNTED AMPLIFIER LTE700	TMA2094F01V2-1	3	-3	0	SHEETS S1-1 & S3
42	KAELUS TOWER MOUNTED AMPLIFIER (LTE700/NR850)	KA-1031	0	6	6	SHEETS S1-2 & S3
43	RFS HYBRIFLEX 7/8" (8P16F)	S1 (80m), S2 (25m) & S3 (40m) LENGTH	3	3 (SPARE)	3	SHEETS S1-2 & S3
44	W&B HYBRID CABLE 7/8" (8P24F)	S1 (80m), S2 (25m) & S3 (40m) LENGTH	3	0	3	SHEETS S1-2 & S3
45	RFS LCF114-50J	S1 (70m) LENGTH	2	0	2	SHEETS S1-1 & S3
46	RFS LCF78-50JA	S2 & S3 (30m) LENGTH	4	0	4	SHEETS S1-2 & S3
47	GPS SPLITTER	INSTALLED IN 45RU PATHFINDER RACK GD/2/3	1	1 (SPARE)	1	SHEETS E1 & E5
48	GPS RECEIVER	INSTALLED IN 45RU PATHFINDER RACK GD/2/3	1	-1	0	SHEETS E1 & E5
49	GPS ANTENNA (LTE)	ERICSSON GPS KRE 101 2082 1 OMNI	1	-1	0	SHEETS S1 & S3
50	GPS RECEIVER UNIT	ERICSSON GRU 05 01 RECEIVER NCD90189/1	0	1	1	SHEETS E1 & E5
51	KAELUS, DUAL BAND GNSS GPS ACTIVE ANTE	KA-7005-1110	0	1	1	SHEETS S1 & S3
52	RF JUMPER 1_5M N F TO SMA M	TSR951339/1500	0	1	1	-
53	GPS WBT TOD CABLE	WBT R6000 TOD CABLE - 3M	0	1	1	-
54	GPS SYNC CABLE	RPM1136127/2000	0	1	1	-
55	EQUIPMENT SHELTER AIR CONDITIONER	SPLIT TYPE	2	0	2	SHEET E1

UNAPPROVED DRAWING

COMPLIANCE BOX
COMPLETED AS PER DESIGN ☐
ALTERATIONS IN RED ☐
NAME (PRINT)
SIGNATURE DATE

NOTE: THIS DRAWING TO BE READ IN CONJUNCTION WITH SHEETS S0 & S0-1

FOR CONSTRUCTION

DO NOT SCALE

CYIENT
Level-14, 333 Collins Street, Melbourne, Victoria 3000 Australia
T +61 3 8605 4815 | www.cyient.com

ORDER	DRWN	CHKD	AMENDMENT	EXAM	APPD	DATE	ISS
NA21224.01	KA	GM	FOR CONSTRUCTION - 30084105W0105CYI - NR3600	MB	JY	16.04.20	1
NA21224.01	CU	SK	AS BUILT - 30084105W0149CYI - NR3600	KSK	DG	22.09.20	2
NA28642.01	TE	MB	FOR CONSTRUCTION - 80005689WO224CYI - NR850/NR2600/NR3600	XX	XX	12.08.26	3

© Telstra Limited ACN 086 174 781 All rights reserved.

Telstra

MOBILE NETWORK SITE 288399
BELLA VISTA 29-31 LEXINGTON DR
SITE SPECIFIC NOTES - SHEET 3 OF 3
29-31 LEXINGTON DRIVE, BELLA VISTA, NSW 2153

DWG NO. N109732 SHT NO. S0-2

A3

TN

ADJACENT MULTI LEVEL BUILDING

MULTI STORY CARPARK

MULTI LEVEL BUILDING

ADJACENT MULTI LEVEL BUILDING

CARPARK ENTRY

CARPARK AREA (TYP.)

CARPARK ENTRY

LEXINGTON DRIVE

MERIDIAN PLACE

11845

20175

5050

3550

PROPOSED TELSTRA CHAIN BARRIER. REFER TO SHEET T3-13 FOR DETAILS

EXISTING BOLLARDS WITH CHAIN BARRIERS (4 OFF) TO BE RECOVERED

EXISTING SIGN SECURED TO CHAIN BARRIER TO BE RELOCATED ON PROPOSED CHAIN BARRIER # 7

PROPOSED TELSTRA STEEL SUPPORT STRUCTURE TO BE INSTALLED FOR SECTOR 3 BEHIND SECTOR 1

PROPOSED TELSTRA #4 SIGN SECURED FIXED ON THE PROPOSED POLE 1.5m ARL # 4

EXISTING BUILDING ENTRANCE

EXISTING ELECTRICAL SWITCH ROOM ON ROOF LEVEL

EXISTING SIGN SECURED TO ROOF ACCESS DOORUSING STAINLESS STEEL STRAPS # 4

7 PROPOSED SIGN SECURED TO PROPOSED CHAIN BARRIER

#15 PROPOSED EME SIGN SECURED 2m BELOW THE TELSTRA ANTENNAS ON THE WALL

REFER TO SHEET S1-2 FOR THE ANTENNA AND RRU LAYOUT DETAILS FOR SECTORS 1 & 3

4 EXISTING TELSTRA #6 SIGN SECURED FIXED ON THE EXISTING POLE 1.5m ARLTO BE REPLACED WITH NEW EME #4 SIGNAGE

7 # 2 PROPOSED SIGN SECURED TO CHAIN BARRIER

EXISTING STEEL STRUCTURE 1 SUPPORTS EXISTING TELSTRA PANEL ANTENNAS (SECTOR 1) AND PROPOSED RRU (1 OFF) AND EXISTING RRU INTERFACE JUNCTION BOX (1 OFF)

EXISTING STEEL STRUCTURE 2 SUPPORTS EXISTING/PROPOSED TELSTRA PANEL ANTENNAS (SECTOR 2) AND PROPOSED RRU (1 OFF) AND EXISTING RRU INTERFACE JUNCTION BOX (1 OFF)

REFER TO SHEET S1-1 FOR THE ANTENNA AND RRU LAYOUT DETAILS FOR SECTOR 2

EXISTING TELSTRA STEEL SUPPORT STRUCTURE ASSOCIATED WITH ANTENNAS AND MOUNTS SECTOR 3 TO BE RECOVERED AND PROPOSED STEEL SUPPORT STRUCTURE FOR SECTOR 3 WILL BE INSTALLED IN CLOSER TO THE SECTOR 1 LOCATION

PROPOSED TELSTRA CHAIN BARRIER. REFER TO SHEET T3-13 FOR DETAILS

2 # 7 PROPOSED TELSTRA SIGN SECURED FIXED TO CHAIN BARRIER

RFNSA SITE No. 2153032

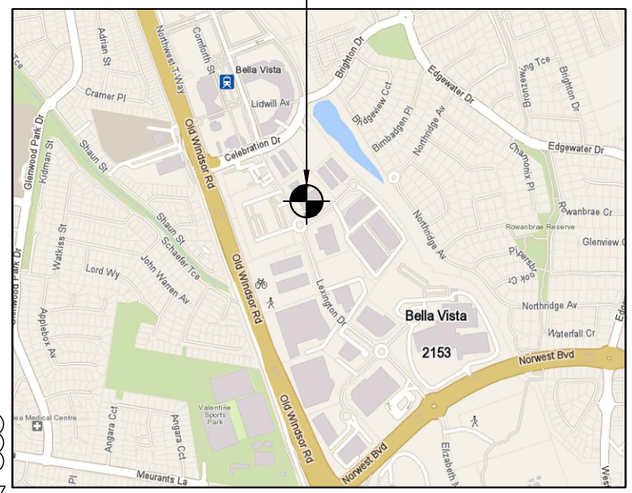

COPYRIGHT © WHEREIS® REGISTERED TRADEMARK OF SENSIS PTY LTD.

LOCALITY PLAN

NOT TO SCALE

UNAPPROVED DRAWING

COMPLIANCE BOX

COMPLETED AS PER DESIGN ☐

ALTERATIONS IN RED ☐

NAME (PRINT)

SIGNATURE DATE

NOTES:

1. ALL EXTERNAL FEEDERS AND TAILS ARE BIRD PROOFED AS PER EXTERNAL PLANT POLICY 003615.
2. FOR SITE SPECIFIC NOTES REFER TO SHEETS S0, S0-1 & S0-2.
3. FOR EME SIGNS NOTED THUS #X REFER 005486 FOR DETAILS.
4. ALL DIMENSIONS ARE IN MILLIMETERS UNLESS SPECIFIED OTHERWISE.

SITE ACCESS

SCALE 1:800

8m 0 8m 16m 24m 32m 40m

SCALE 1:800

NOTE: THIS DRAWING TO BE READ IN CONJUNCTION WITH SHEETS S1-1 & S1-2

FOR CONSTRUCTION

DO NOT SCALE

PROPERTY DESCRIPTION

PART OF CP/SP80821
PARISH OF CASTLE HILL
COUNTY OF CUMBERLAND

SITE STRUCTURE CO-ORDINATES (GDA94) GPS READING ACCURACY: ± 10m CENTRE OF STRUCTURE		
STRUCTURE 1	LAT. (S)	-33.73332° (GDA 94)
	LONG. (E)	150.94620° (GDA 94)
STRUCTURE 2	LAT. (S)	-33.73358° (GDA 94)
	LONG. (E)	150.94640° (GDA 94)
STRUCTURE 3	LAT. (S)	-33.73354° (GDA 94)
	LONG. (E)	150.94626° (GDA 94)

CYIENT
Level-14, 333 Collins Street, Melbourne, Victoria 3000 Australia
T +61 3 8605 4815 | www.cyient.com

ORDER	DRWN	CHKD	AMENDMENT	EXAM	APPD	DATE	ISS
NA13832.01	ES	ES	72204548-LTE1800-AS BUILT-WO1-ERIC	ES	BDB	25.03.14	5
NA15604.01	MH	AK	AS BUILT - 30051137W0029TELSTRA - LTE700	LY	CG	22.01.16	6
NA18834.01	MT	BJ	AS BUILT - 30069071W0430SSNC - LTE2100 / LTE2600	KV	DG	29.01.19	7
NA21224.01	KA	GM	FOR CONSTRUCTION - 30084105W0105CYI - NR3600	MB	JY	16.04.20	8
NA21224.01	CU	SK	AS BUILT - 30084105W0149CYI - NR3600	KSK	DG	22.09.20	9
NA28642.01	TE	MB	FOR CONSTRUCTION - 80005689WO224CYI - NR850/NR2600/NR3600	XX	XX	12.08.26	10

© Telstra Limited ACN 086 174 781 All rights reserved.

Telstra

MOBILE NETWORK SITE 288399
BELLA VISTA 29-31 LEXINGTON DR
SITE ACCESS AND LOCALITY PLAN
29-31 LEXINGTON DRIVE, BELLA VISTA, NSW 2153

DWG NO. N109732

SHT NO. S1

A3

TN

METAL SHEETING ROOF

ROOF LEVEL +RL 103.60m

SECTOR 1 REFER TO SHEET S1-2

ROOF LEVEL +RL 106.70m

METAL SHEETING ROOF

UNAPPROVED DRAWING

EXISTING TELSTRA LTE700/WCDMA850/LTE2600 PANEL ANTENNAS (2 OFF A2 & A3) TO BE RECOVERED
EXISTING TELSTRA NR3500 PANEL ANTENNAS (2 OFF A5 & A6) TO BE RECOVERED
EXISTING TELSTRA LTE1800/LTE2100 PANEL ANTENNAS (2 OFF A8 & A9) TO BE RECOVERED
EXISTING TELSTRA LTE2600 RRUS 32 B7 (2 OFF) TO BE RECOVERED
EXISTING TELSTRA LTE1800/LTE2100 RADIO4443 B1/B3 (2 OFF) TO BE RECOVERED
EXISTING TELSTRA RFS RRU INTERFACE BOXES 4P16F (2 OFF) TO BE RECOVERED
EXISTING TELSTRA LTE700/WCDMA850 TMA'S (2 OFF) TO BE RECOVERED

10

7 PROPOSED SIGN SECURED ON GATE

10

7 SIGN SECURED TO TOP OF FACE OF CONCRETE WALL & FACE OF CLIPLOK ROOF (TYP.)

4 EXISTING SIGN SECURED TO ROOF ACCESS DOOR USING STAINLESS STEEL STRAPS

EXISTING TELSTRA SURFACE POWER & FIBRE ROUTE

EXISTING TELSTRA LEASE AREA (TYP.)

EXISTING 1.2 m HIGH LADDER AND CAGED LADDER

EXISTING TELSTRA STEEL SUPPORT STRUCTURE ASSOCIATED WITH ANTENNAS AND MOUNTS SECTOR 3 TO BE RECOVERED AND PROPOSED STEEL SUPPORT STRUCTURE FOR SECTOR 3 WILL BE INSTALLED IN CLOSER TO THE SECTOR 1 LOCATION

10

EXISTING TELSTRA LTE700 GPS ANTENNA (1 OFF A10) TO BE RECOVERED AND REPLACED WITH PROPOSED TELSTRA KAELUS KA-7005-1110 GPS ANTENNA (1 OFF A10) TO BE INSTALLED AT 4.4m USING STANDARD MOUNT ON EXISTING MOUNT. EXISTING GPS SURGE ARRESTER (1 OFF) TO BE REUSED

PROPOSED TELSTRA LTE1800/LTE2100/NR/LTE2600 RADIO4485 (B3/B1/B7) (1 OFF) TO BE INSTALLED ON EXISTING RRU MOUNT

10

COMPLIANCE BOX
COMPLETED AS PER DESIGN ☐
ALTERATIONS IN RED ☐
NAME (PRINT)
SIGNATURE DATE

4 EXISTING TELSTRA #6 SIGN SECURED FIXED ON THE EXISTING POLE TO BE REPLACED WITH NEW EME #4 SIGNAGE

7 PROPOSED SIGN SECURED TO DOOR

10

EXISTING OPTUS/VODAFONE ANTENNAS (5 OFF)

EXISTING TELSTRA 450W CABLE LADDER ACCOMMODATES EXISTING TELSTRA FEEDERS (3 OFF)

EXISTING TELSTRA HANDRAIL (TYP.)

EXISTING SIGN SECURED TO TOP OF FACE OF CONCRETE WALL # 4

EXISTING SIGN SECURED TO TELSTRA SHELTER DOOR USING TEK SCREWS STEEL STRAPS #13

5000

1590

3280

650

3000

897

A2

A5

43°

2

2

PROPOSED TELSTRA LTE700/NR850 TMA'S (2 OFF) TO BE INSTALLED BEHIND PANEL ANTENNA (A2) ON PROPOSED ANTENNA MOUNT

PROPOSED TELSTRA LTE700/NR850/LTE1800/LTE2100/NR/LTE2600 PANEL ANTENNA (1 OFF A2) TO BE INSTALLED ON PROPOSED ANTENNA MOUNT

EXISTING TELSTRA W&B RRU INTERFACE JUNCTION BOX (1 OFF) FOR LTE1800/LTE2100/NR/LTE2600/NR3600 TO BE REUSED AND RELOCATED MOUNTED BEHIND PANEL ANTENNA (A5) ON PROPOSED ANTENNA MOUNT

PROPOSED TELSTRA NR3600 PANEL ANTENNA (1 OFF A5) TO BE INSTALLED ON PROPOSED ANTENNA MOUNT

2 PROPOSED SIGNS UV STABLE STICKERS AND FIXED TO REAR OF ALL TELSTRA PANEL ANTENNAS

EXISTING TELSTRA EQUIPMENT SHELTER TO ACCOMMODATE PROPOSED TELSTRA EQUIPMENT. REFER TO SHEET E1 FOR DETAILS

10

EXISTING TELSTRA W&B 7/8" HYBRID CABLE (1 OFF, S3), RFS LCF78-50JA FEEDERS (2 OFF, S3) AND RFS 7/8" HYBRID CABLE (1 OFF, S3) TO BE RECOVERED FROM EXISTING TELSTRA 300W CABLE LADDER

10

EXISTING TELSTRA 300W CABLE LADDER (SECTOR 2) TO ACCOMMODATE EXISTING TELSTRA W&B 7/8" HYBRID CABLE (1 OFF) FOR LTE1800/LTE2100/NR/LTE2600/NR3600 AND EXISTING TELSTRA RFS LCF78-50JA FEEDERS (2 OFF) FOR LTE700/NR850. EXISTING TELSTRA RFS 7/8" HYBRID CABLE (1 OFF) TO MAKE AS SPARE

10

ANTENNA & RRU LAYOUT AT E.L. 22.8m TO 27.85m (SECTOR 2)

SCALE 1:100

1m 0 1m 2m 3m 4m 5m SCALE 1:100

NOTE: THIS DRAWING TO BE READ IN CONJUNCTION WITH SHEETS S1 & S1-2

10 FOR CONSTRUCTION

DO NOT SCALE

NOTES:

1. ALL EXTERNAL FEEDERS AND TAILS ARE BIRD PROOFED AS PER EXTERNAL PLANT POLICY 003615.
2. FOR SITE SPECIFIC NOTES REFER TO SHEETS S0, S0-1 & S0-2.
3. FOR EME SIGNS NOTED THUS #X REFER 005486 FOR DETAILS.
4. ALL DIMENSIONS ARE IN MILLIMETERS UNLESS SPECIFIED OTHERWISE.

CYIENT
Level-14, 333 Collins Street, Melbourne, Victoria 3000 Australia
T +61 3 8605 4815 | www.cyient.com

ORDER	DRWN	CHKD	AMENDMENT	EXAM	APPD	DATE	ISS
NA13832.01	ES	ES	72204548-LTE1800-AS BUILT-WO1-ERIC	ES	BDB	25.03.14	5
NA15604.01	MH	AK	AS BUILT - 30051137W0029TELSTRA - LTE700	LY	CG	22.01.16	6
NA18834.01	MT	BJ	AS BUILT - 30069071W0430SSNC - LTE2100 / LTE2600	KV	DG	29.01.19	7
NA21224.01	KA	GM	FOR CONSTRUCTION - 30084105W0105CYI - NR3600	MB	JY	16.04.20	8
NA21224.01	CU	SK	AS BUILT - 30084105W0149CYI - NR3600	KSK	DG	22.09.20	9
NA28642.01	TE	MB	FOR CONSTRUCTION - 80005689WO224CYI - NR850/NR2600/NR3600	XX	XX	12.08.26	10

© Telstra Limited ACN 086 174 781 All rights reserved.

Telstra

MOBILE NETWORK SITE 288399
BELLA VISTA 29-31 LEXINGTON DR
ANTENNA LAYOUT - SHEET 1 OF 2
29-31 LEXINGTON DRIVE, BELLA VISTA, NSW 2153

DWG NO. N109732 SHT NO. S1-1

A3

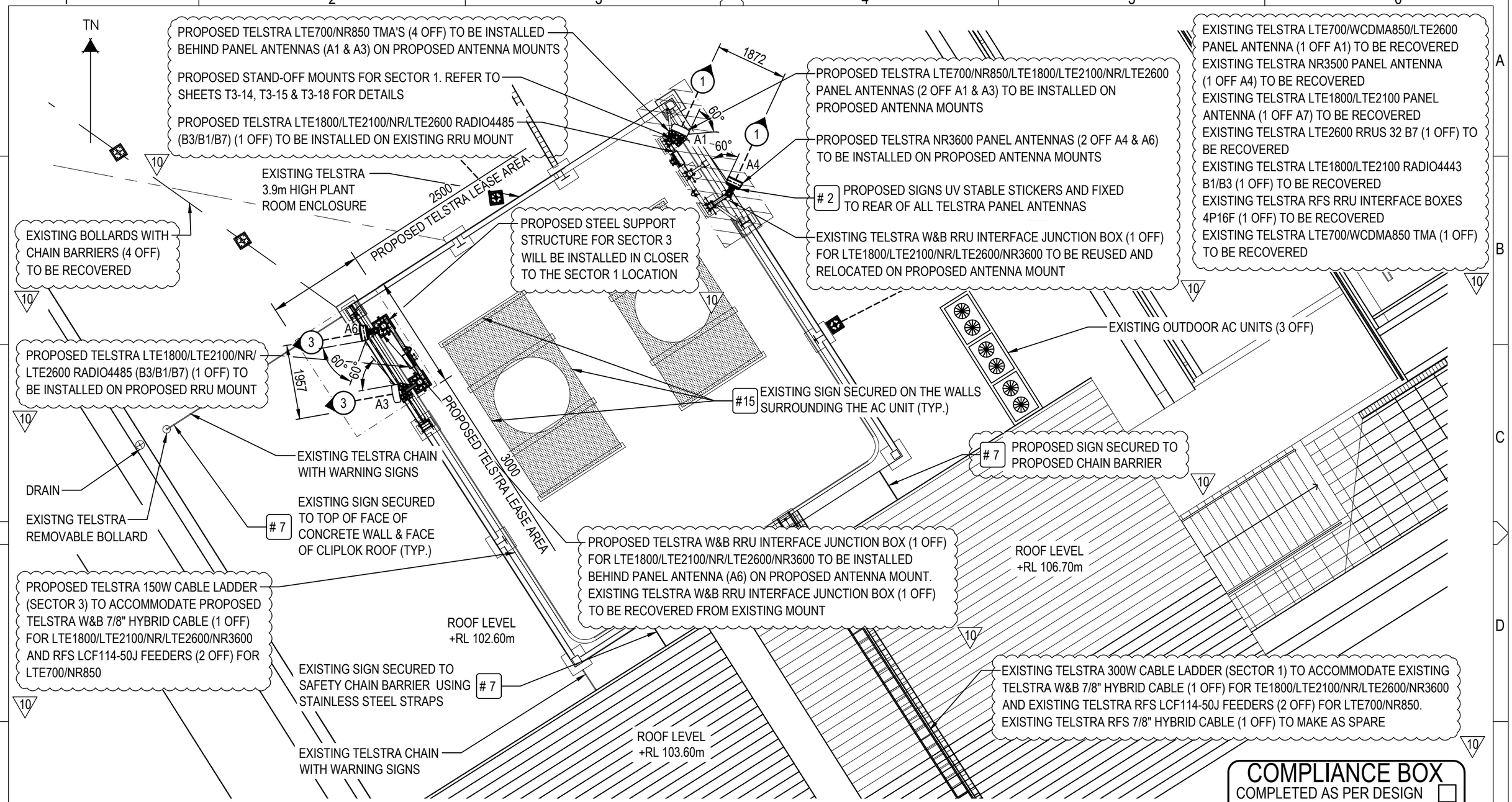

ANTENNA & RRU LAYOUT AT E.L. 21.50m TO 26.25m (SECTORS 1 & 3)

SCALE 1:100

1m 0 1m 2m 3m 4m 5m SCALE 1:100

UNAPPROVED DRAWING

NOTE: THIS DRAWING TO BE READ IN CONJUNCTION WITH SHEETS S1 & S1-1

10 FOR CONSTRUCTION

COMPLIANCE BOX
COMPLETED AS PER DESIGN ☐
ALTERATIONS IN RED ☐
NAME (PRINT)
SIGNATURE DATE

DO NOT SCALE

NOTES:

1. ALL EXTERNAL FEEDERS AND TAILS ARE BIRD PROOFED AS PER EXTERNAL PLANT POLICY 003615.
2. FOR SITE SPECIFIC NOTES REFER TO SHEETS S0, S0-1 & S0-2.
3. FOR EME SIGNS NOTED THUS #X REFER 005486 FOR DETAILS.
4. ALL DIMENSIONS ARE IN MILLIMETERS UNLESS SPECIFIED OTHERWISE.

CYIENT
Level-14, 333 Collins Street, Melbourne, Victoria 3000 Australia
T +61 3 8605 4815 | www.cyient.com

ORDER	DRWN	CHKD	AMENDMENT	EXAM	APPD	DATE	ISS
NA13832.01	ES	ES	72204548-LTE1800-AS BUILT-WO1-ERIC	ES	BDB	25.03.14	5
NA15604.01	MH	AK	AS BUILT - 30051137W0029TELSTRA - LTE700	LY	CG	22.01.16	6
NA18834.01	MT	BJ	AS BUILT - 30069071W0430SSNC - LTE2100 / LTE2600	KV	DG	29.01.19	7
NA21224.01	KA	GM	FOR CONSTRUCTION - 30084105W0105CYI - NR3600	MB	JY	16.04.20	8
NA21224.01	CU	SK	AS BUILT - 30084105W0149CYI - NR3600	KSK	DG	22.09.20	9
NA28642.01	TE	MB	FOR CONSTRUCTION - 80005689WO224CYI - NR850/NR2600/NR3600	XX	XX	12.08.26	10

© Telstra Limited ACN 086 174 781 All rights reserved.

Telstra

MOBILE NETWORK SITE 288399
BELLA VISTA 29-31 LEXINGTON DR
ANTENNA LAYOUT - SHEET 2 OF 2
29-31 LEXINGTON DRIVE, BELLA VISTA, NSW 2153

DWG NO. N109732 SHT NO. S1-2

A3

COMPLIANCE BOX
COMPLETED AS PER DESIGN ☐
ALTERATIONS IN RED ☐
NAME (PRINT)
SIGNATURE DATE

UNAPPROVED DRAWING

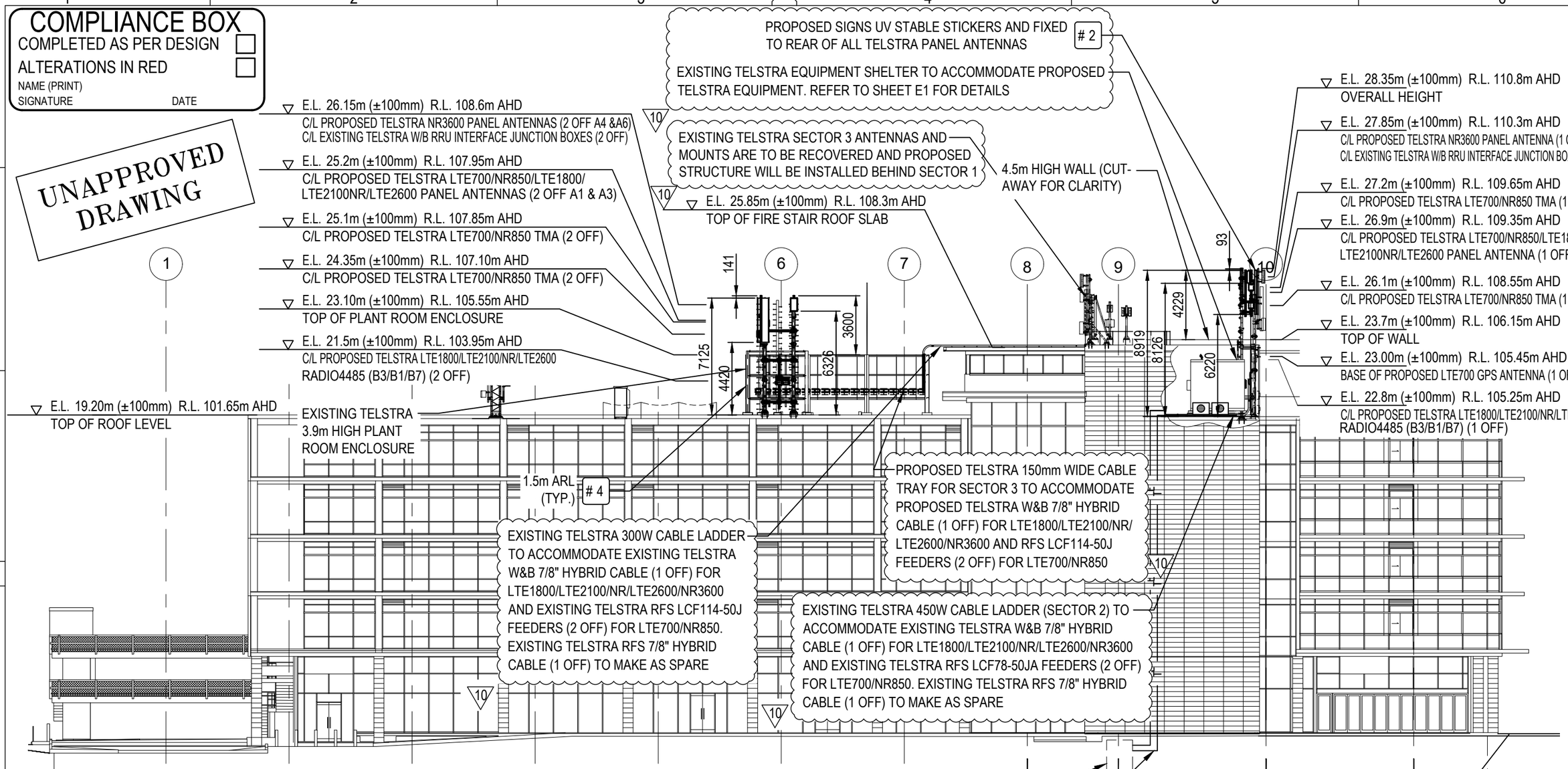

EXISTING TELSTRA LTE700/WCDMA850/LTE2600 PANEL ANTENNAS (3 OFF A1, A2 & A3) TO BE RECOVERED
EXISTING TELSTRA NR3500 PANEL ANTENNAS (3 OFF A4, A5 & A6) TO BE RECOVERED
EXISTING TELSTRA LTE1800/LTE2100 PANEL ANTENNAS (3 OFF A7, A8 & A9) TO BE RECOVERED
EXISTING TELSTRA LTE2600 RRUS 32 B7 (3 OFF) TO BE RECOVERED
EXISTING TELSTRA LTE1800/LTE2100 RADIO4443 B1/B3 (3 OFF) TO BE RECOVERED
EXISTING TELSTRA RFS RRU INTERFACE BOXES 4P16F (3 OFF) TO BE RECOVERED
EXISTING TELSTRA LTE700/WCDMA850 TMA'S (3 OFF) TO BE RECOVERED

SOUTH WEST ELEVATION

SCALE 1:250

5m 0 5m 10m SCALE 1:250

NOTE: THIS DRAWING TO BE READ IN CONJUNCTION WITH SHEET S3-1

FOR CONSTRUCTION

DO NOT SCALE

NOTES:

1. ALL EXTERNAL FEEDERS AND TAILS ARE BIRD PROOFED AS PER EXTERNAL PLANT POLICY 003615.
2. FOR SITE SPECIFIC NOTES REFER TO SHEETS S0, S0-1 & S0-2.
3. FOR EME SIGNS NOTED THUS #X REFER 005486 FOR DETAILS.
4. ALL DIMENSIONS ARE IN MILLIMETERS UNLESS SPECIFIED OTHERWISE.

CYIENT
Level-14, 333 Collins Street, Melbourne, Victoria 3000 Australia
T +61 3 8605 4815 | www.cyient.com

ORDER	DRWN	CHKD	AMENDMENT	EXAM	APPD	DATE	ISS
NA13832.01	ES	ES	72204548-LTE1800-AS BUILT-WO1-ERIC	ES	BDB	25.03.14	5
NA15604.01	MH	AK	AS BUILT - 30051137W0029TELSTRA - LTE700	LY	CG	22.01.16	6
NA18834.01	MT	BJ	AS BUILT - 30069071W0430SSNC - LTE2100 / LTE2600	KV	DG	29.01.19	7
NA21224.01	KA	GM	FOR CONSTRUCTION - 30084105W0105CYI - NR3600	MB	JY	16.04.20	8
NA21224.01	CU	SK	AS BUILT - 30084105W0149CYI - NR3600	KSK	DG	22.09.20	9
NA28642.01	TE	MB	FOR CONSTRUCTION - 80005689WO224CYI - NR850/NR2600/NR3600	XX	XX	12.08.26	10

© Telstra Limited ACN 086 174 781 All rights reserved.

Telstra

MOBILE NETWORK SITE 288399
BELLA VISTA 29-31 LEXINGTON DR
SOUTH WEST ELEVATION
29-31 LEXINGTON DRIVE, BELLA VISTA, NSW 2153

DWG NO. N109732 SHT NO. S3

A3

TELSTRA MOBILES ANTENNA CONFIGURATION TABLE

ANTENNA No	ANTENNA TYPE & SIZE H x W x D (mm)	ANTENNA ACTION REQUIRED	ANTENNA HEIGHT C/L A.G.L.	PHYSICAL ANTENNA BEARING (°T)	SECTOR NO. & TECHNOLOGY
A1	KAELUS F6RHEU01 PANEL 2705 x 470 x 178mm	INSTALL	25.2m	25°	S1: LTE700/NR850 S1: LTE700/NR850
					S1: LTE700/NR850 S1: LTE700/NR850
					S1: LTE1800/LTE2100/NR/LTE2600 S1: LTE1800/LTE2100/NR/LTE2600
					S1: LTE1800/LTE2100/NR/LTE2600 S1: LTE1800/LTE2100/NR/LTE2600
A2	KAELUS F6RHEU01 PANEL 2705 x 470 x 178mm	INSTALL	26.9m	185°	S2: LTE700/NR850 S2: LTE700/NR850
					S2: LTE700/NR850 S2: LTE700/NR850
					S2: LTE1800/LTE2100/NR/LTE2600 S2: LTE1800/LTE2100/NR/LTE2600
					S2: LTE1800/LTE2100/NR/LTE2600 S2: LTE1800/LTE2100/NR/LTE2600
A3	KAELUS F6RHEU01 PANEL 2705 x 470 x 178mm	INSTALL	25.2m	260°	S3: LTE700/NR850 S3: LTE700/NR850
					S3: LTE700/NR850 S3: LTE700/NR850
					S3: LTE1800/LTE2100/NR/LTE2600 S3: LTE1800/LTE2100/NR/LTE2600
					S3: LTE1800/LTE2100/NR/LTE2600 S3: LTE1800/LTE2100/NR/LTE2600
A4	ERICSSON AIR3258 PANEL 793 x 408 x 235mm	INSTALL	26.15m	25°	S1: NR3600 S1: NR3600
A5	ERICSSON AIR3258 PANEL 793 x 408 x 235mm	INSTALL	27.85m	185°	S2: NR3600 S2: NR3600
A6	ERICSSON AIR3258 PANEL 793 x 408 x 235mm	INSTALL	26.15m	260°	S3: NR3600 S3: NR3600

TELSTRA MOBILES ANTENNA CONFIGURATION TABLE

ANTENNA No	ANTENNA TYPE & SIZE H x W x D (mm)	ANTENNA ACTION REQUIRED	ANTENNA HEIGHT C/L A.G.L.	PHYSICAL ANTENNA BEARING (°T)	SECTOR NO. & TECHNOLOGY
A1 (OLD)	ARGUS RVVPX310B2 PANEL 2533 x 353 x 209mm	REMOVE	24.9m	60°	-
A2 (OLD)	ARGUS RVVPX310B2 PANEL 2533 x 353 x 209mm	REMOVE	25.5m	180°	-
A3 (OLD)	ARGUS RVVPX310B2 PANEL 2533 x 353 x 209mm	REMOVE	25.5m	310°	-
A4 (OLD)	ERICSSON AIR6488 PANEL 810 x 400 x 200mm	REMOVE	25.75m	60°	-
A5 (OLD)	ERICSSON AIR6488 PANEL 810 x 400 x 200mm	REMOVE	26.35m	180°	-
A6 (OLD)	ERICSSON AIR6488 PANEL 810 x 400 x 200mm	REMOVE	26.35m	310°	-
A7	ARGUS RVVPX310.11B-T2 PANEL 2533 x 350 x 208mm	REMOVE	24.9m	60°	-
A8	ARGUS RVVPX310.11B-T2 PANEL 2533 x 350 x 208mm	REMOVE	25.5m	180°	-
A9	ARGUS RVVPX310.11B-T2 PANEL 2533 x 350 x 208mm	REMOVE	25.5m	310°	-

UNAPPROVED DRAWING

COMPLIANCE BOX
COMPLETED AS PER DESIGN ☐
ALTERATIONS IN RED ☐
NAME (PRINT)
SIGNATURE DATE

NOTE: THIS DRAWING TO BE READ IN CONJUNCTION WITH SHEET S3

10 FOR CONSTRUCTION

DO NOT SCALE

CYIENT
Level-14, 333 Collins Street, Melbourne, Victoria 3000 Australia
T +61 3 8605 4815 | www.cyient.com

ORDER	DRWN	CHKD	AMENDMENT	EXAM	APPD	DATE	ISS
NA13832.01	ES	ES	72204548-LTE1800-AS BUILT-WO1-ERIC	ES	BDB	25.03.14	5
NA15604.01	MH	AK	AS BUILT - 30051137W0029TELSTRA - LTE700	LY	CG	22.01.16	6
NA18834.01	MT	BJ	AS BUILT - 30069071W0430SSNC - LTE2100 / LTE2600	KV	DG	29.01.19	7
NA21224.01	KA	GM	FOR CONSTRUCTION - 30084105W0105CYI - NR3600	MB	JY	16.04.20	8
NA21224.01	CU	SK	AS BUILT - 30084105W0149CYI - NR3600	KSK	DG	22.09.20	9
NA28642.01	TE	MB	FOR CONSTRUCTION - 80005689WO224CYI - NR850/NR2600/NR3600	XX	XX	12.08.26	10

© Telstra Limited ACN 086 174 781 All rights reserved.

Telstra

MOBILE NETWORK SITE 288399
BELLA VISTA 29-31 LEXINGTON DR
ANTENNA CONFIGURATION TABLE
29-31 LEXINGTON DRIVE, BELLA VISTA, NSW 2153

DWG NO. N109732 SHT NO. S3-1

A3

Plan forming Annexure " " to Lease
of PREMISES at BELLA VISTA
by
to
dated the Day of

L.G.A.: THE HILLS SHIRE
Locality: BELLA VISTA
Parish: CASTLE HILL
County: CUMBERLAND

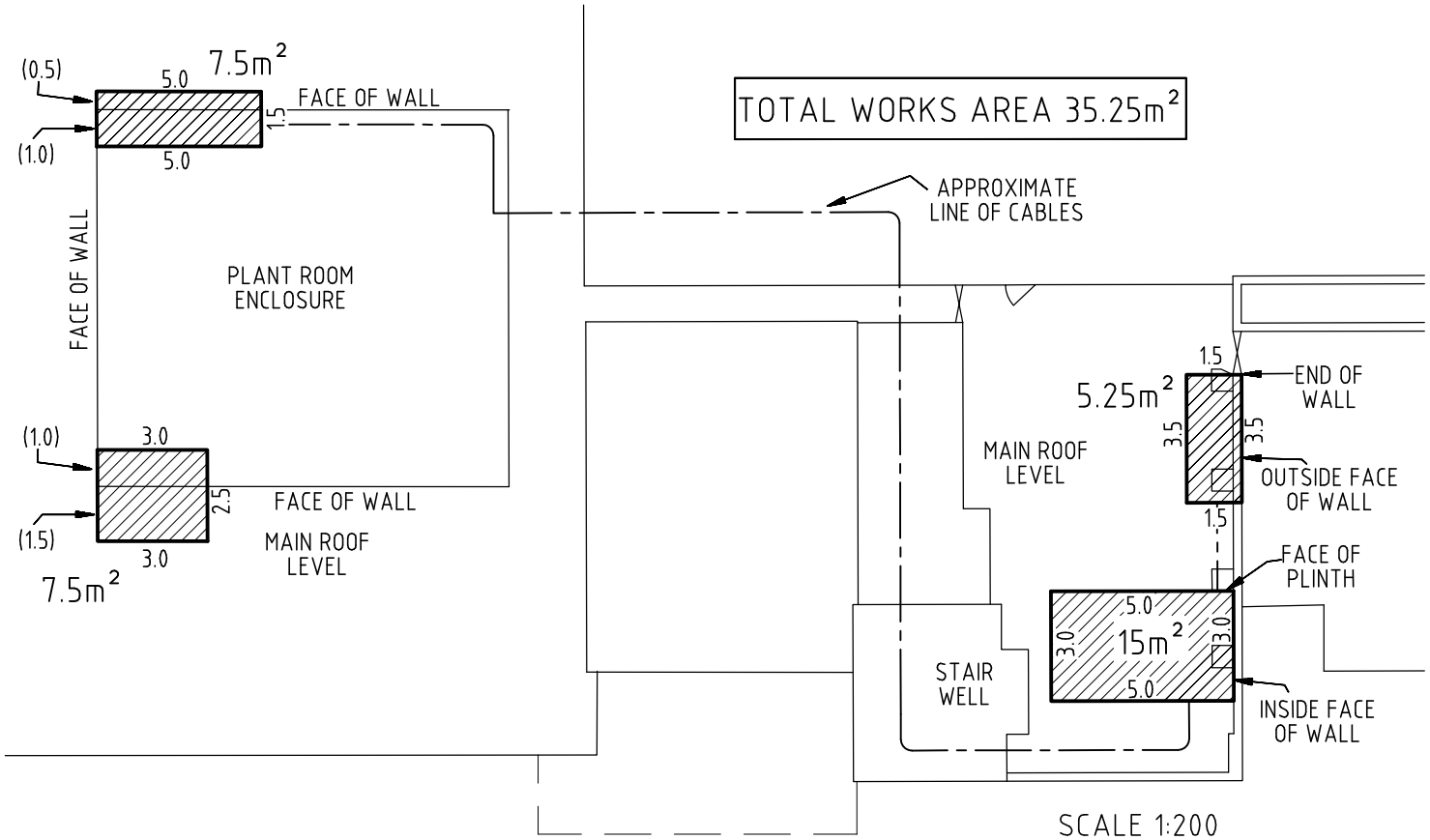

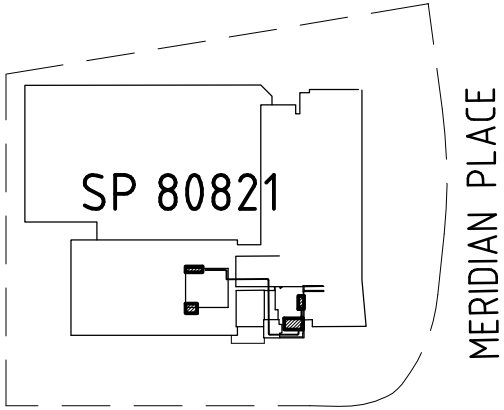

PROPERTY DIAGRAM
SCALE 1: 2000

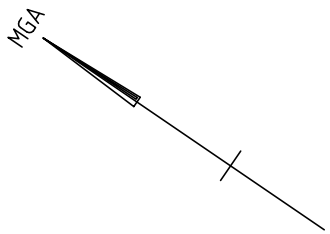

JDE No.

ALL DIMENSIONS IN METRES

ORDER	DRAWN	CHKD	AMENDMENT	EXAM	APPD	DATE	ISS
NA13047	KM	CW	Original	GM	GL	6.5.13	1
NA13047	CW	KM	Lease Area Enlarged	GM	GL	25.05.13	2
NA13047	MW	KM	Lease Area Updated	SEJ	MC	30.07.2026	3

Telstra

MOBILE NETWORK SITE 288399
BELLA VISTA 29-31 LEXINGTON DRIVE
SITE TENURE PLAN
29-31 LEXINGTON DRIVE, BELLA VISTA, NSW 2153

DWG NO. N109732
SHT NO. G1 INDEX

Sureline Geomatics
TEL. (02) 9896 8025
info@suregeo.com.au

SVY KM REF 26315

CT: CP/SP80821
Owner: STRATA PLAN No 80821
Address: 29 LEXINGTON DRIVE
BELLA VISTA 2153

NOTE: Covenants or Restriction to user have not been investigated for the purpose of this plan

© Telstra Corporation Limited ABN 33 051 775 556 All rights reserved.

A4

EXISTING TELSTRA LTE700 GPS ANTENNA (1 OFF A10) TO BE REPLACED WITH PROPOSED TELSTRA KAELUS KA-7005-1110 GPS ANTENNA (1 OFF A10) TO BE INSTALLED AT 4.4m USING STANDARD MOUNT ON EXISTING MOUNT. EXISTING GPS SURGE ARRESTER (1 OFF) TO BE REUSED

EXISTING TELSTRA ENATEL UNIT WITH DC-DC CONVERTER (4 OFF) TO BE REUSED

EXISTING TELSTRA ELTEK SP18-RRU PSU (1 OFF) WITH FP2, 2kW 48V RECTIFIERS (5 OFF) & FXH190-12S BATTERY STRINGS (2 OFF) TO BE REUSED. REFER TO SHEET E4-1 FOR DETAILS

EXISTING SEB/SPC ABOVE CABLE TRAY

EXISTING TELSTRA 12.2 WAY SPD BOX (1 OFF) TO BE RECOVERED

EXISTING TELSTRA ELTEK SP18-HC PSU (1 OFF) WITH FP2, 2kW 48V RECTIFIERS (4 OFF) & FXH190-12S BATTERY STRING (1 OFF) TO BE REUSED. REFER TO SHEET E4 FOR DETAILS

EXISTING TELSTRA 12.3 WAY SPD BOX (1 OFF) INSTALLED ON EXTERNAL WALL IN WEATHERPROOF ENCLOSURE TO BE REUSED

EXISTING SPLIT SYSTEM AC INTERNAL UNITS (2 OFF) TO BE REUSED

PROPOSED TO REPLACE EXISTING PATHFINDER RACK WITH DECON RGL-091 RACK (1 OFF) WITH KA-6035 QUAD FILTERS (3 OFF), LTE700/NR850 RADIO 4490HP (B28/B26) (3 OFF), 4490 ADAPTOR SHELVES (3 OFF) & KEREM A100 PDP (1 OFF). EXISTING RBS6202 (1 OFF) TO BE FULLY RECOVERED. REFER TO RACK CONFIGURATION RAH0120 FY25_DRAN GF & SHEET E5 FOR DETAILS

EXISTING WCDMA850 IM FILTERS (3 OFF) INSTALLED IN MISC. RACK TO BE MAKE IT AS SPARE

EXISTING TELSTRA 45RU PATHFINDER RACK (1 OFF) TO BE REUSED TO HOST PROPOSED TELSTRA LTE700/NR850/LTE1800/NR/LTE2600/NR3600 RP6672 (1 OFF), DCDU (1 OFF), SLIDE OUT FIBRE MGMT TRAYS (2 OFF) & GRU 05 01 GPS RECEIVER (1 OFF). EXISTING TELSTRA FIBRE PATCH PANEL (1 OFF), CABLE GUIDE (4 OFF) & FIBRE MGMT TRAY (1 OFF) TO BE REUSED. EXISTING TELSTRA R6675 (1 OFF) TO BE RELOCATED FROM RT/2/2/9 TO RT/2/2/29. EXISTING TELSTRA RBS6202 (1 OFF), RUS 02 (B28B) (6 OFF), COMBINERS (3 OFF) & GPS SPLITTER (1 OFF) TO BE DISCONNECTED AND MAKE AS SPARE. EXISTING TELSTRA GPS RECEIVER (1 OFF), R503 (2 OFF), BB5216 (1 OFF) & BB6630 (1 OFF) TO BE RECOVERED. REFER RACK CONFIGURATION RAH0120 FY25_DRAN AUG AND SHEET E5 FOR DETAILS

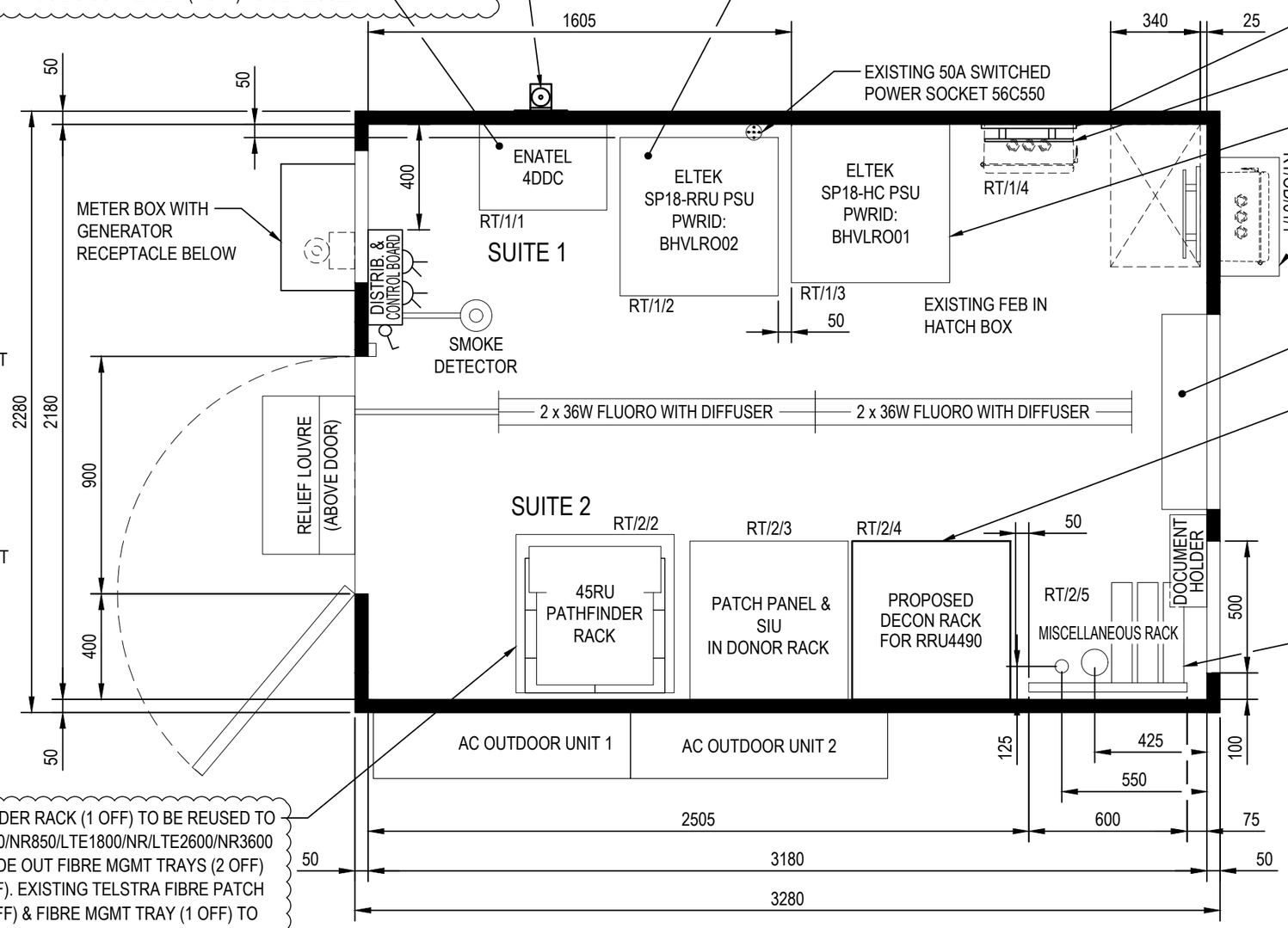

LEGEND

- RESERVED EQUIPMENT
- LIGHT SWITCH
- EXISTING EQUIPMENT
- PROPOSED EQUIPMENT

UNAPPROVED DRAWING

TELSTRA NATIONAL STANDARD ICS 3.2 SHELTER - EQUIPMENT LAYOUT

CEILING HEIGHT 2700-2750

REGION A

SCALE 1:20

COMPLIANCE BOX
COMPLETED AS PER DESIGN ☐
ALTERATIONS IN RED ☐
NAME (PRINT)
SIGNATURE DATE

FOR CONSTRUCTION

DO NOT SCALE

NOTES:

1. FOR SITE SPECIFIC NOTES REFER TO SHEETS S0, S0-1 & S0-2.
2. REFER TO ICS DRAWINGS IN CADLINK NATIONAL DATABASE.
3. MITS POSITIONS IN FORMAT XX/X/X WHERE SHELTER ON GROUND PREFIX GD/1/1 AND SHELTER ON ROOFTOP PREFIX RT/1/1. REFERENCE SP000511 NUMBERING, LABELLING AND DATA ENTRY REQUIREMENTS OF NETWORK INVENTORY.

CYIENT
Level-14, 333 Collins Street, Melbourne, Victoria 3000 Australia
T +61 3 8605 4815 | www.cyient.com

ORDER	DRWN	CHKD	AMENDMENT	EXAM	APPD	DATE	ISS
NA13832.01	ES	ES	72204548-LTE1800-AS BUILT-WO1-ERIC	ES	BDB	25.03.14	4
NA15604.01	MH	AK	AS BUILT - 30051137W0029TELSTRA - LTE700	LY	CG	22.01.16	5
NA18834.01	MT	BJ	AS BUILT - 30069071W0430SSNC - LTE2100 / LTE2600	KV	DG	29.01.19	6
NA21224.01	KA	GM	FOR CONSTRUCTION - 30084105W0105CYI - NR3600	MB	JY	16.04.20	7
NA21224.01	CU	SK	AS BUILT - 30084105W0149CYI - NR3600	KSK	DG	22.09.20	8
NA28642.01	TE	MB	FOR CONSTRUCTION - 80005689WO224CYI - NR850/NR2600/NR3600	XX	XX	12.08.26	9

© Telstra Limited ACN 086 174 781 All rights reserved.

Telstra

MOBILE NETWORK SITE 288399
BELLA VISTA 29-31 LEXINGTON DR
EQUIPMENT LAYOUT
29-31 LEXINGTON DRIVE, BELLA VISTA, NSW 2153

DWG NO. N109732 SHT NO. E1

A3

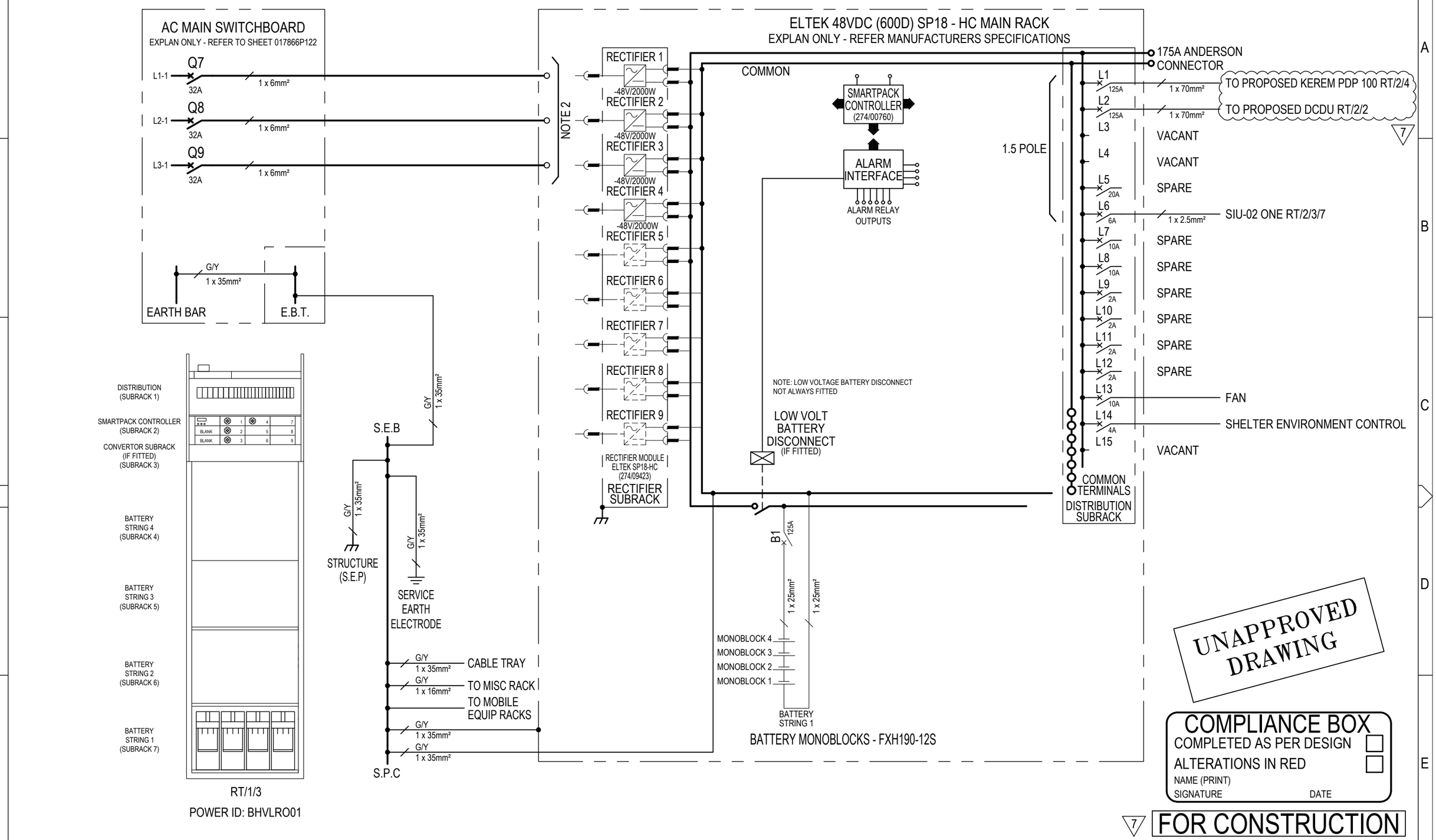

UNAPPROVED DRAWING

COMPLIANCE BOX

COMPLETED AS PER DESIGN ☐
ALTERATIONS IN RED ☐
NAME (PRINT)
SIGNATURE DATE

7 FOR CONSTRUCTION

DO NOT SCALE

NOTES:

1. EARTHING AND A.C. WIRING IAW AS3000, AS3015, & OTHER RELEVANT DOCUMENTATION.
2. REFER TO MANUFACTURERS HAND BOOK FOR AC CONNECTIONS.
3. PANEL NUMBERING IN THE SUBRACK NUMBERED AS ENTERED IN STRUCTURE BUILDER/MITS.
4. CELLS ARE NUMBERED FROM 1 AT THE POSITIVE END OF STRING.
5. BATTERY STRINGS ARE NUMBERED AS SHOWN ABOVE.

CYIENT
Level-14, 333 Collins Street, Melbourne, Victoria 3000 Australia
T +61 3 8605 4815 | www.cyient.com

ORDER	DRWN	CHKD	AMENDMENT	EXAM	APPD	DATE	ISS
NA13832.01	ES	ES	72204548-LTE1800-AS BUILT-WO1-ERIC	ES	BDB	25.03.14	2
NA15604.01	MH	AK	AS BUILT - 30051137W0029TELSTRA - LTE700	LY	CG	22.01.16	3
NA18834.01	MT	BJ	AS BUILT - 30069071W0430SSNC - LTE2100 / LTE2600	KV	DG	29.01.19	4
NA21224.01	KA	GM	FOR CONSTRUCTION - 30084105W0105CYI - NR3600	MB	JY	16.04.20	5
NA21224.01	CU	SK	AS BUILT - 30084105W0149CYI - NR3600	KSK	DG	22.09.20	6
NA28642.01	TE	MB	FOR CONSTRUCTION - 80005689WO224CYI - NR850/NR2600/NR3600	XX	XX	12.08.26	7

© Telstra Limited ACN 086 174 781 All rights reserved.

Telstra

MOBILE NETWORK SITE 288399
BELLA VISTA 29-31 LEXINGTON DR
DC POWER LINE DIAGRAM - SHEET 1 OF 2
29-31 LEXINGTON DRIVE, BELLA VISTA, NSW 2153

DWG NO. N109732 SHT NO. E4

A3

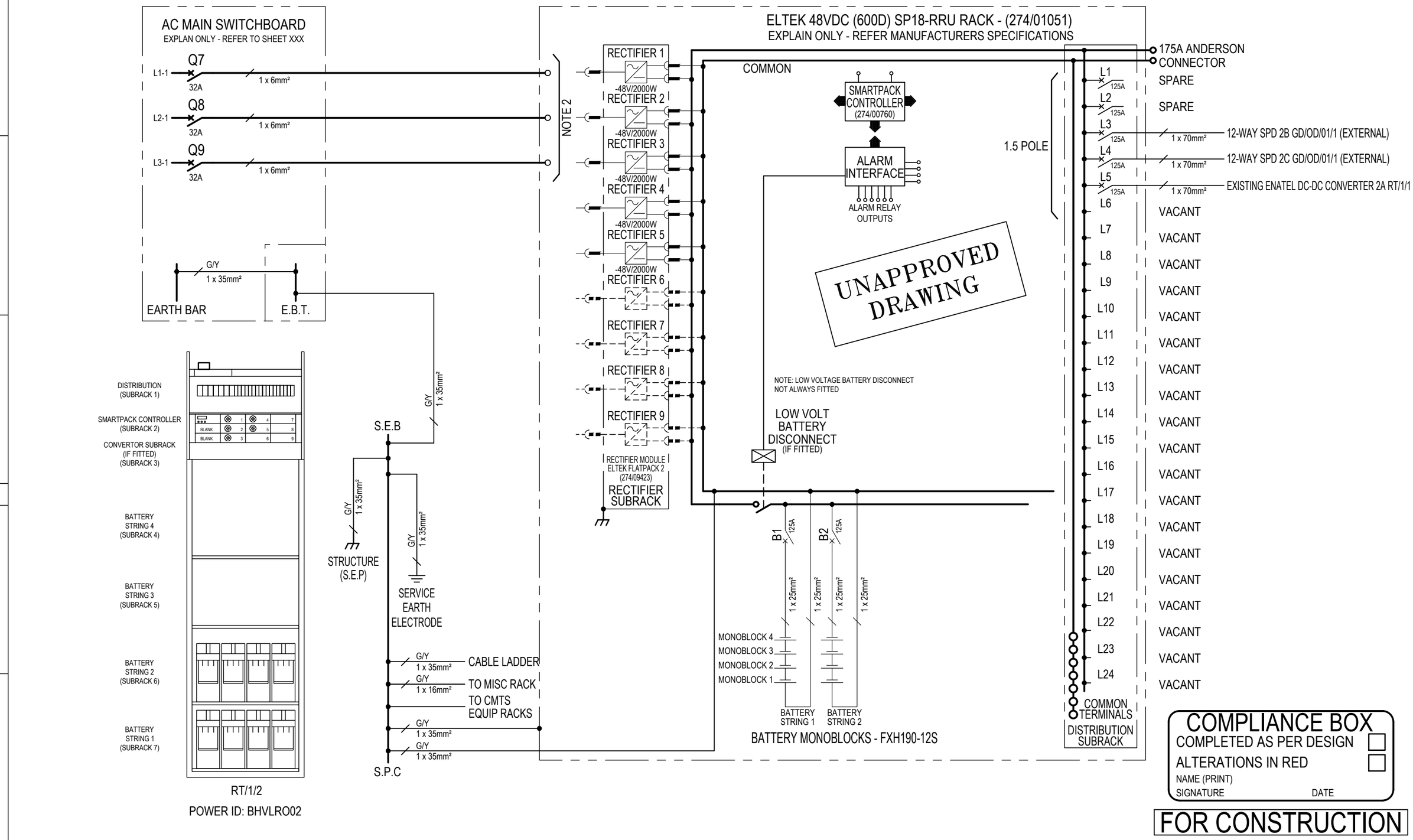

COMPLIANCE BOX
COMPLETED AS PER DESIGN ☐
ALTERATIONS IN RED ☐
NAME (PRINT)
SIGNATURE DATE

FOR CONSTRUCTION

NOTES:

1. EARTHING AND A.C. WIRING IAW AS3000, AS3015, & OTHER RELEVANT DOCUMENTATION.
2. REFER TO MANUFACTURERS HAND BOOK FOR AC CONNECTIONS.
3. PANEL NUMBERING IN THE SUBRACK NUMBERED AS ENTERED IN STRUCTURE BUILDER/MITS.
4. CELLS ARE NUMBERED FROM 1 AT THE POSITIVE END OF STRING.
5. BATTERY STRINGS ARE NUMBERED AS SHOWN ABOVE.

DO NOT SCALE

CYIENT
Level-14, 333 Collins Street, Melbourne, Victoria 3000 Australia
T +61 3 8605 4815 | www.cyient.com

ORDER	DRWN	CHKD	AMENDMENT	EXAM	APPD	DATE	ISS
NA21224.01	KA	GM	FOR CONSTRUCTION - 30084105W0105CYI - NR3600	MB	JY	16.04.20	1
NA21224.01	CU	SK	AS BUILT - 30084105W0149CYI - NR3600	KSK	DG	22.09.20	2
NA28642.01	TE	MB	FOR CONSTRUCTION - 80005689WO224CYI - NR850/NR2600/NR3600	XX	XX	12.08.26	3

© Telstra Limited ACN 086 174 781 All rights reserved.

Telstra

MOBILE NETWORK SITE 288399
BELLA VISTA 29-31 LEXINGTON DR
DC POWER LINE DIAGRAM - SHEET 2 OF 2
29-31 LEXINGTON DRIVE, BELLA VISTA, NSW 2153

DWG NO. N109732
SHT NO. E4-1

A3

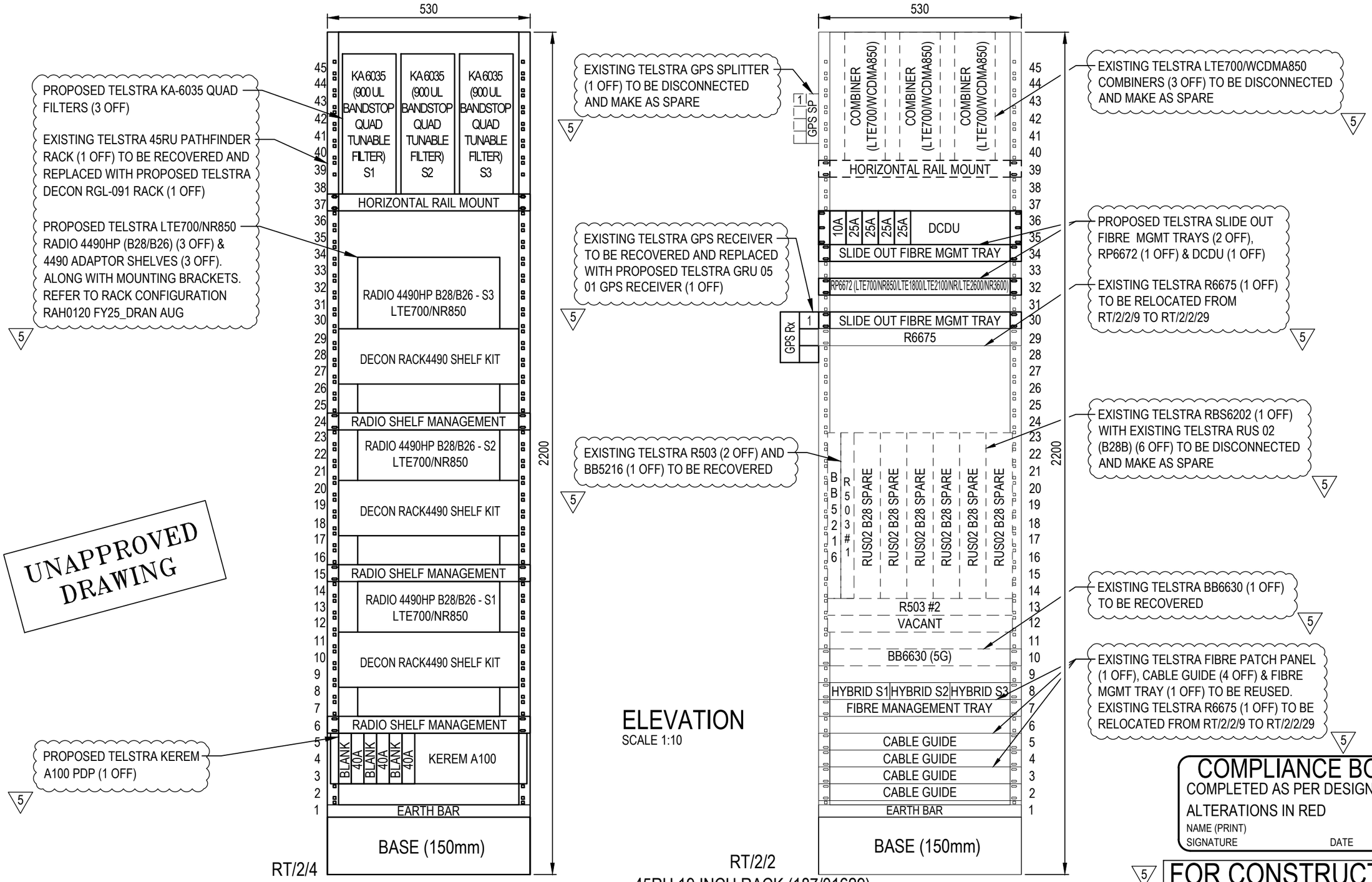

UNAPPROVED DRAWING

ELEVATION

SCALE 1:10

COMPLIANCE BOX

COMPLETED AS PER DESIGN ☐

ALTERATIONS IN RED ☐

NAME (PRINT)

SIGNATURE DATE

5 FOR CONSTRUCTION

DO NOT SCALE

NOTES:

1. FOR SITE SPECIFIC NOTES REFER TO SHEETS S0, S0-1 & S0-2.
2. INDICATIVE 45RU PATHFINDER RACK SHOWN FOR LAYOUT PURPOSES ONLY.
3. REFER TO SHEET E1 FOR EQUIPMENT LAYOUT DETAILS.
4. ALL DIMENSIONS ARE IN MILLIMETERS UNLESS SPECIFIED OTHERWISE.

CYIENT
Level-14, 333 Collins Street, Melbourne, Victoria 3000 Australia
T +61 3 8605 4815 | www.cyient.com

ORDER	DRWN	CHKD	AMENDMENT	EXAM	APPD	DATE	ISS
NA15604.01	MH	AK	AS BUILT - 30051137W0029TELSTRA - LTE700	LY	CG	22.01.16	1
NA18834.01	MT	BJ	AS BUILT - 30069071W0430SSNC - LTE2100 / LTE2600	KV	DG	29.01.19	2
NA21224.01	KA	GM	FOR CONSTRUCTION - 30084105W0105CYI - NR3600	MB	JY	16.04.20	3
NA21224.01	CU	SK	AS BUILT - 30084105W0149CYI - NR3600	KSK	DG	22.09.20	4
NA28642.01	TE	MB	FOR CONSTRUCTION - 80005689WO224CYI - NR850/NR2600/NR3600	XX	XX	12.08.26	5

© Telstra Limited ACN 086 174 781 All rights reserved.

Telstra

MOBILE NETWORK SITE 288399
BELLA VISTA 29-31 LEXINGTON DR
PATHFINDER CHANNEL RACK LAYOUT
29-31 LEXINGTON DRIVE, BELLA VISTA, NSW 2153

DWG NO. N109732 SHT NO. E5

A3

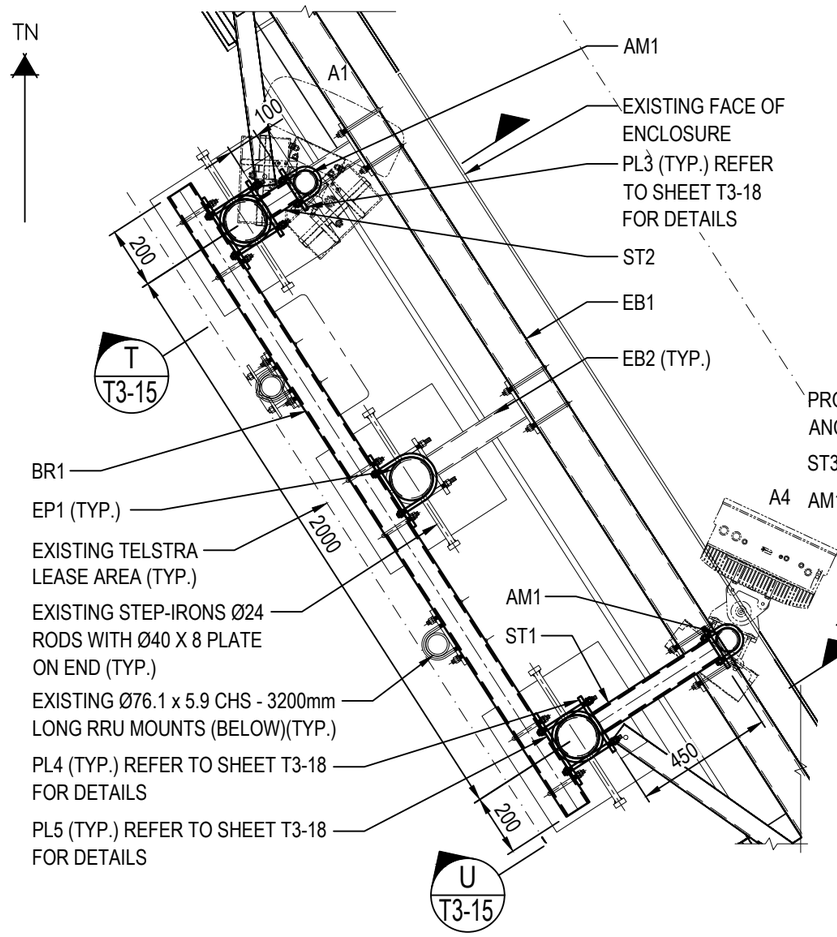

SECTOR 1 ANTENNA PLAN

SCALE 1:20

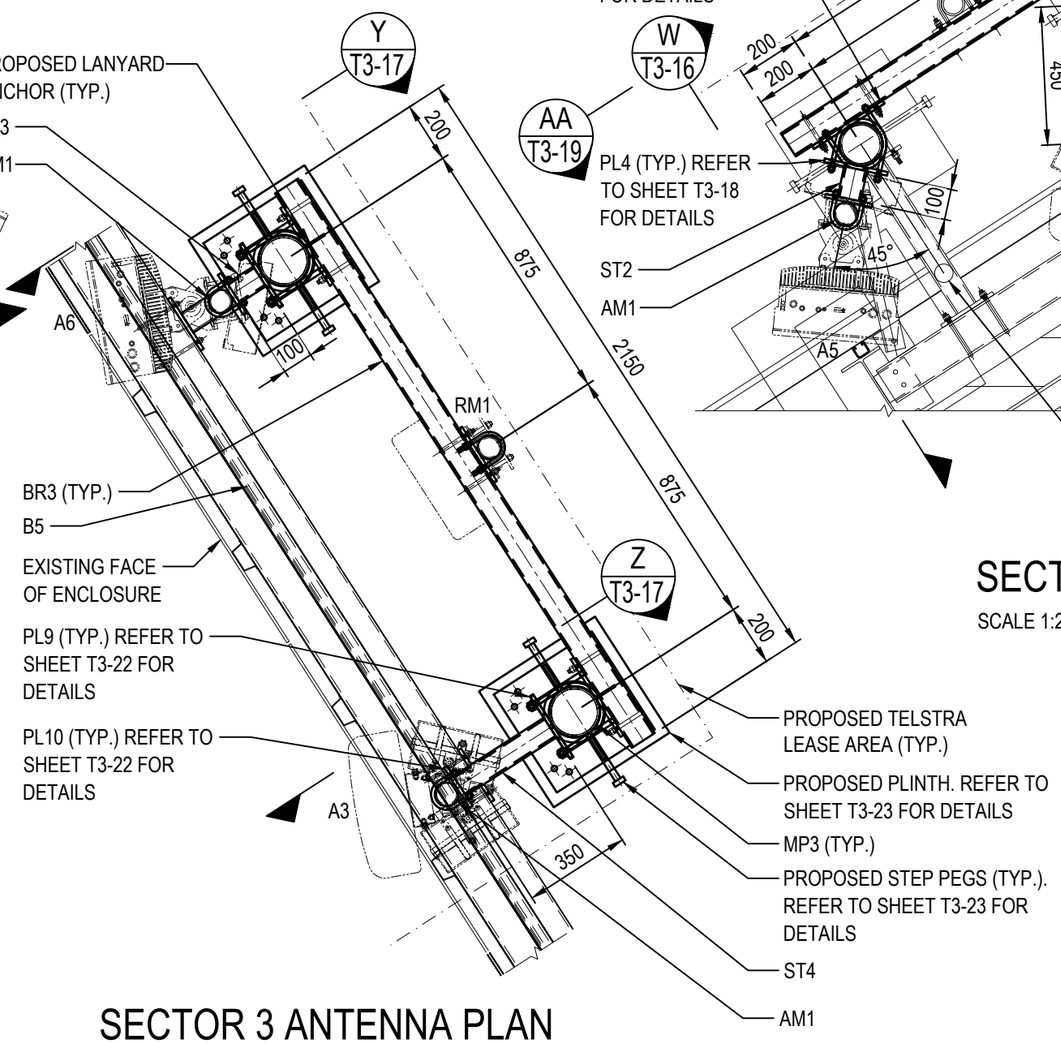

SECTOR 3 ANTENNA PLAN

SCALE 1:20.

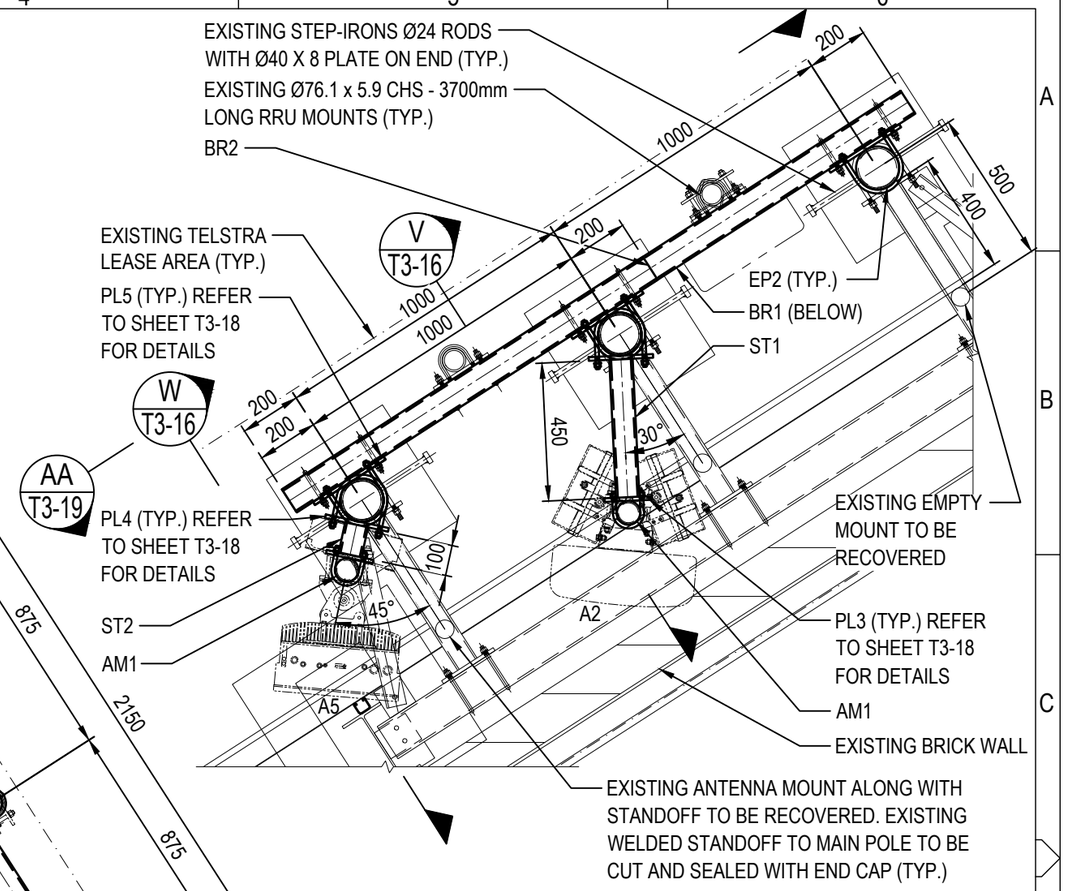

SECTOR 2 ANTENNA PLAN

SCALE 1:20

UNAPPROVED DRAWING

COMPLIANCE BOX

COMPLETED AS PER DESIGN ☐

ALTERATIONS IN RED ☐

NAME (PRINT)

SIGNATURE DATE

FOR CONSTRUCTION

DO NOT SCALE

NOTES:

1. FOR STANDARD CONSTRUCTION NOTES REFER TO TELSTRA STANDARD DRAWING 017866P05.
2. REFER TO SHEET T3-18 FOR STRUCTURAL NOTES AND MEMBER SCHEDULE DETAILS.
3. REFER TO TELSTRA STANDARD DRAWING 017866P70 SHEET 4 FOR U-BOLT DETAILS.

CYIENT
Level-14, 333 Collins Street, Melbourne, Victoria 3000 Australia
T +61 3 8605 4815 | www.cyient.com

ORDER	DRWN	CHKD	AMENDMENT	EXAM	APPD	DATE	ISS
NA28642.01	TE	MB	FOR CONSTRUCTION - 80005689WO224CYI - NR850/NR2600/NR3600	XX	XX	12.08.26	1

© Telstra Limited ACN 086 174 781 All rights reserved.

Telstra

MOBILE NETWORK SITE 288399
BELLA VISTA 29-31 LEXINGTON DR

ANTENNA MOUNTING DETAILS - SHEET 1 OF 4

29-31 LEXINGTON DRIVE, BELLA VISTA, NSW 2153

DWG NO. N109732

SHT NO. T3-14

A3

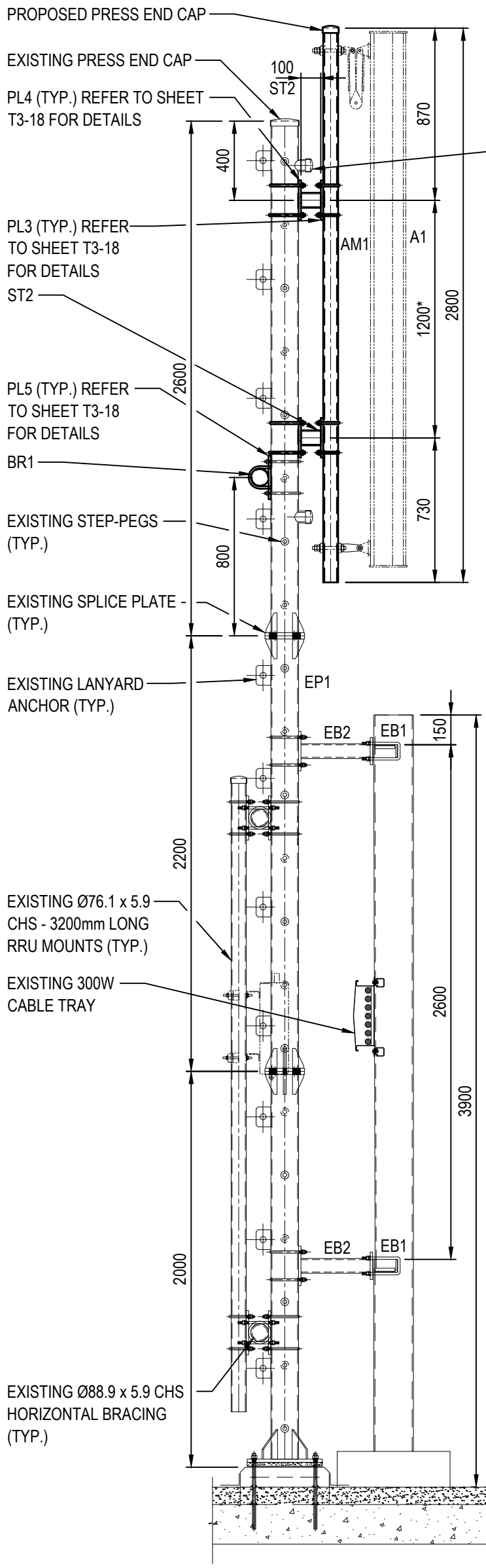

SECTION T T3-14

SCALE 1:25

E.L. 26.15m
C/L PROPOSED 5G ANTENNA
EXISTING STAND-OFF WELDED TO THE EXISTING MAIN POLE SHALL BE CUT AND AN END CAP SHALL BE FIXED (TYP.)

E.L. 25.2m
C/L PROPOSED 4G ANTENNA

E.L. 23.10m
TOP OF ENCLOSURE

E.L. 21.50m
C/L PROPOSED RADIO4485

E.L. 19.20m
TOP OF ROOF LEVEL

NOTES:
* REFER TO NEW STAND-OFF LOCATION TO BE ADJUSTED ON SITE IF ANY CLASHES WITH EXISTING STEEL MEMBER

UNAPPROVED DRAWING

COMPLIANCE BOX
COMPLETED AS PER DESIGN ☐
ALTERATIONS IN RED ☐
NAME (PRINT)
SIGNATURE DATE

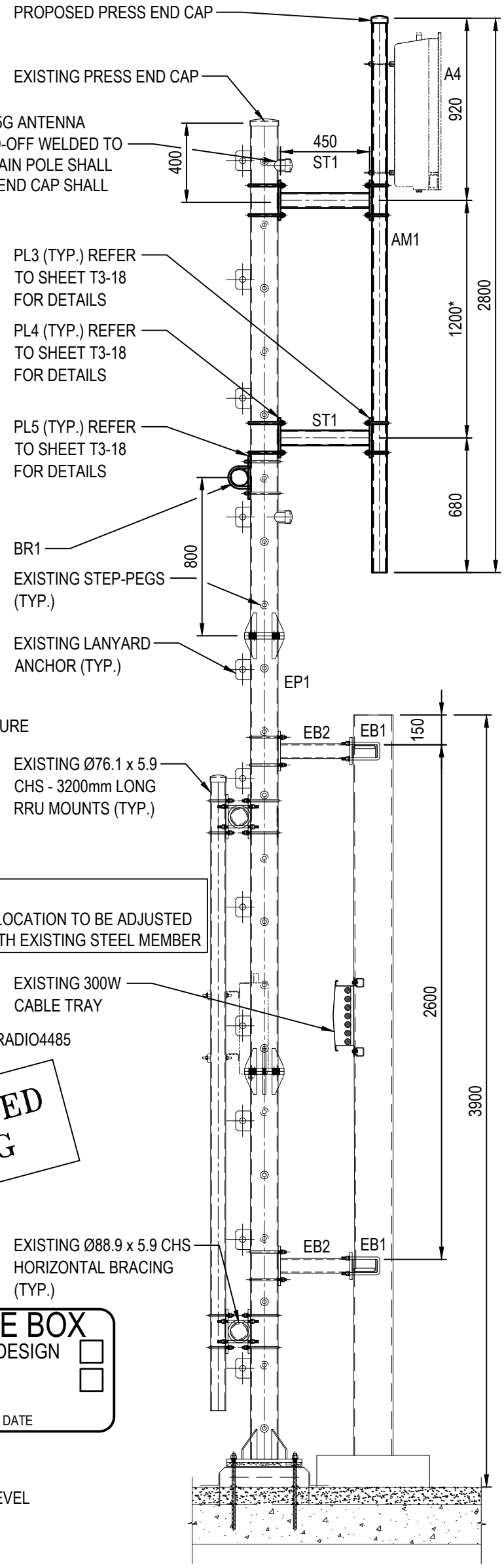

SECTION U T3-14

SCALE 1:25

NOTES:
1. FOR STANDARD CONSTRUCTION NOTES REFER TO TELSTRA STANDARD DRAWING 017866P05.
2. REFER TO SHEET T3-18 FOR STRUCTURAL NOTES AND MEMBER SCHEDULE DETAILS.
3. REFER TO TELSTRA STANDARD DRAWING 017866P70 SHEET 4 FOR U-BOLT DETAILS.

DO NOT SCALE

DIMS IN

FOR CONSTRUCTION

ORDER	DRWN	CHKD	AMENDMENT	EXAM	APPD	DATE	ISS
NA28642.01	TE	MB	FOR CONSTRUCTION - 80005689WO224CYI - NR850/NR2600/NR3600	XX	XX	12.08.26	1

CYIENT
Level-14, 333 Collins Street, Melbourne, Victoria 3000 Australia
T +61 3 8605 4815 | www.cyient.com

Telstra

MOBILE NETWORK SITE 288399
BELLA VISTA 29-31 LEXINGTON DR
ANTENNA MOUNTING DETAILS - SHEET 2 OF 4
29-31 LEXINGTON DRIVE, BELLA VISTA, NSW 2153

DWG NO. N109732

SHT NO. T3-15

© Telstra Limited ACN 086 174 781 All rights reserved.

A3V

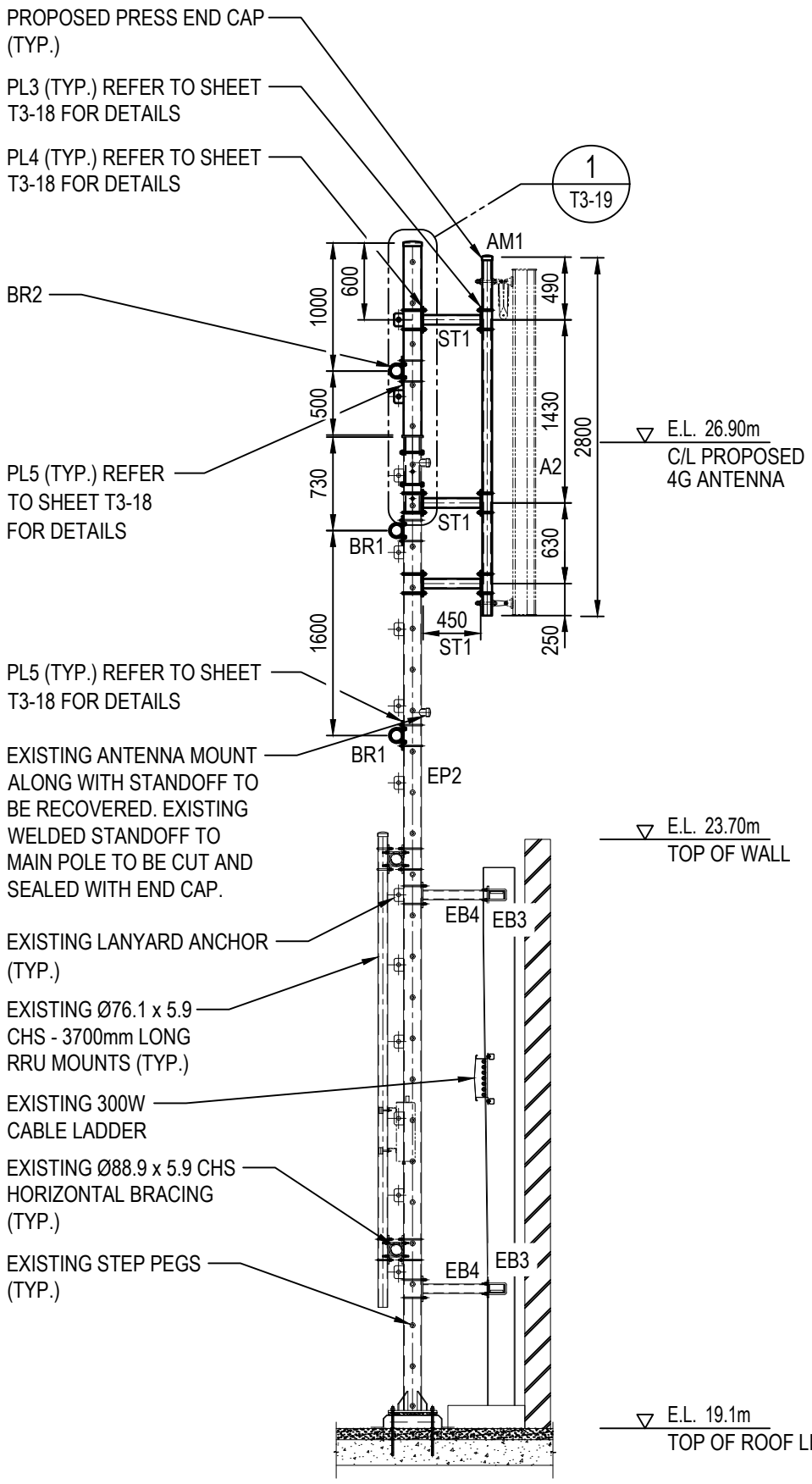

SECTION V T3-14

SCALE 1:50

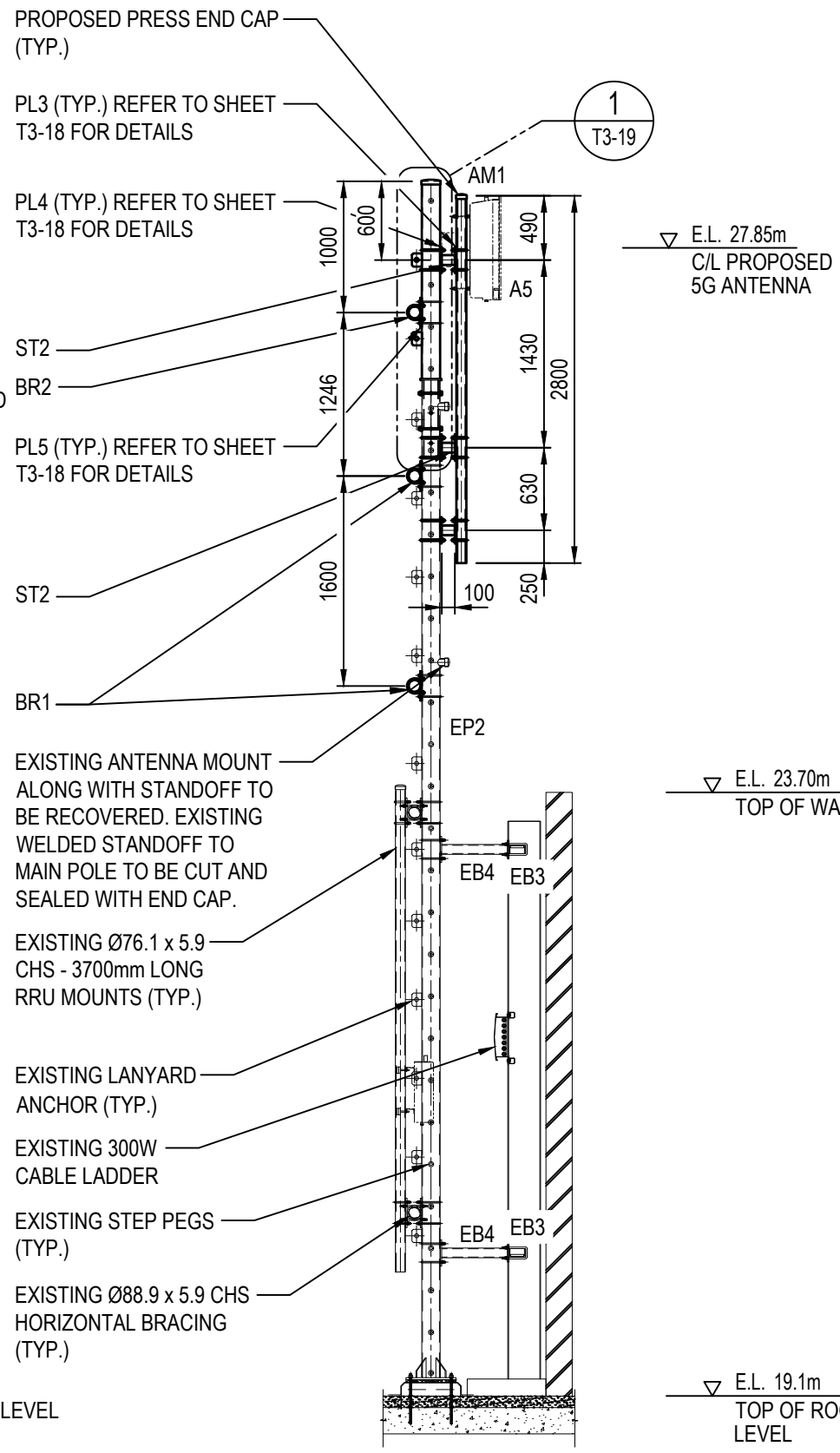

SECTION W T3-14

SCALE 1:50

UNAPPROVED DRAWING

NOTES:

1. FOR STANDARD CONSTRUCTION NOTES REFER TO TELSTRA STANDARD DRAWING 017866P05.
2. REFER TO SHEET T3-18 FOR STRUCTURAL NOTES AND MEMBER SCHEDULE DETAILS.
3. REFER TO TELSTRA STANDARD DRAWING 017866P70 SHEET 4 FOR U-BOLT DETAILS.

DO NOT SCALE

DIMS IN

COMPLIANCE BOX
COMPLETED AS PER DESIGN ☐
ALTERATIONS IN RED ☐
NAME (PRINT)
SIGNATURE DATE

FOR CONSTRUCTION

ORDER	DRWN	CHKD	AMENDMENT	EXAM	APPD	DATE	ISS
NA28642.01	TE	MB	FOR CONSTRUCTION - 80005689WO224CYI - NR850/NR2600/NR3600	XX	XX	12.08.26	1

CYIENT
Level-14, 333 Collins Street, Melbourne, Victoria 3000 Australia
T +61 3 8605 4815 | www.cyient.com

Telstra

MOBILE NETWORK SITE 288399
BELLA VISTA 29-31 LEXINGTON DR
ANTENNA MOUNTING DETAILS - SHEET 3 OF 4
29-31 LEXINGTON DRIVE, BELLA VISTA, NSW 2153

DWG NO. N109732
SHT NO. T3-16

© Telstra Limited ACN 086 174 781 All rights reserved.

A3V

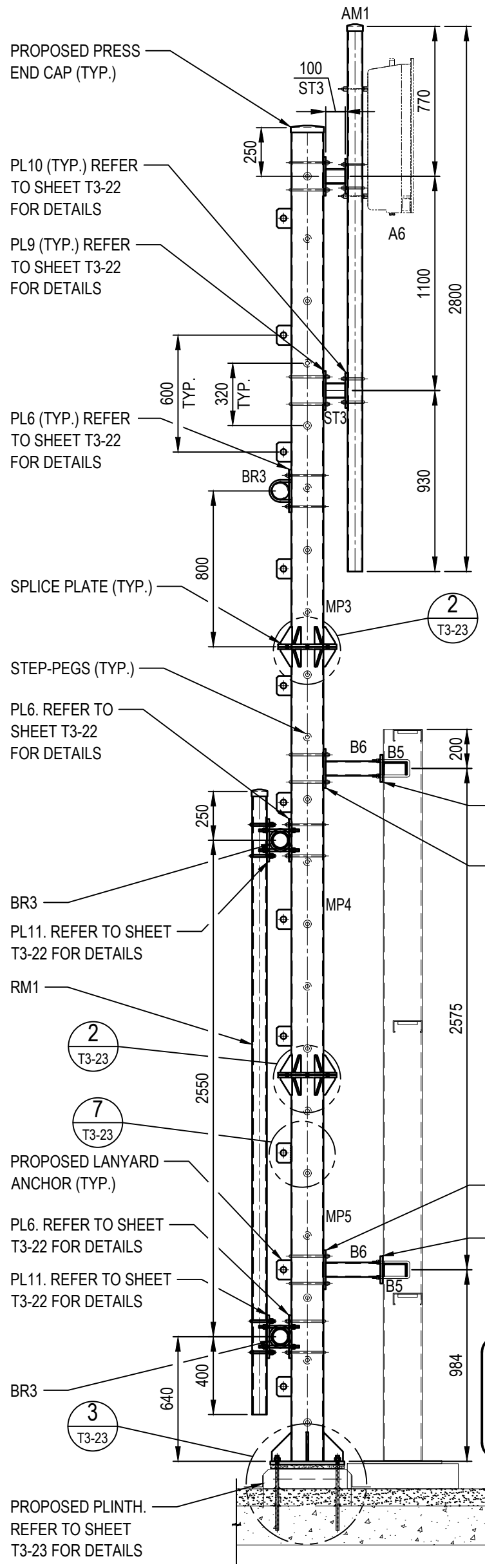

SECTION Y T3-19
SCALE 1:25

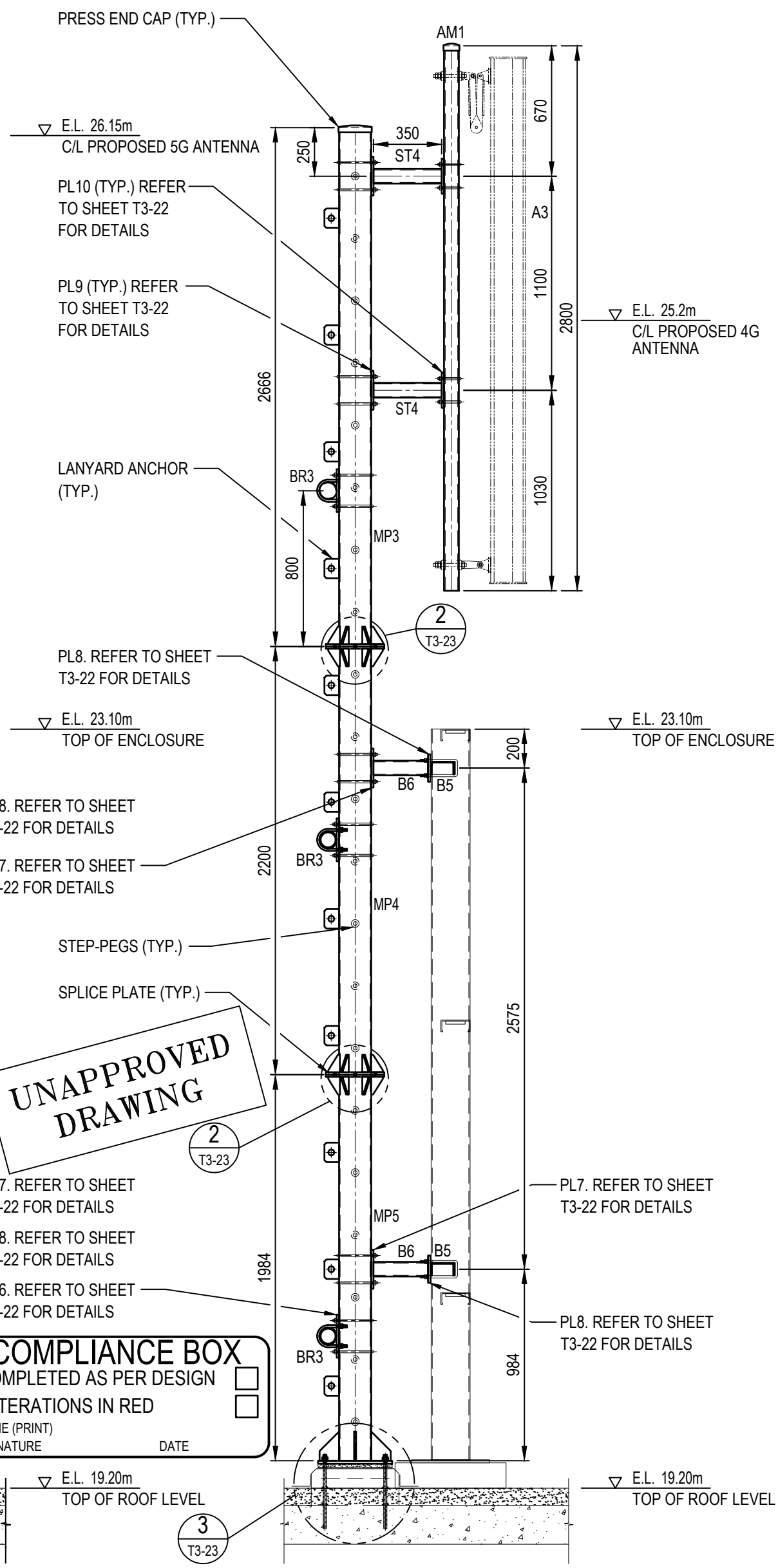

SECTION Z T3-19
SCALE 1:25

UNAPPROVED DRAWING

COMPLIANCE BOX
COMPLETED AS PER DESIGN ☐
ALTERATIONS IN RED ☐
NAME (PRINT)
SIGNATURE DATE

NOTES:

1. FOR STANDARD CONSTRUCTION NOTES REFER TO TELSTRA STANDARD DRAWING 017866P05.
2. REFER TO SHEET T3-18 FOR STRUCTURAL NOTES AND MEMBER SCHEDULE DETAILS.
3. REFER TO TELSTRA STANDARD DRAWING 017866P70 SHEET 4 FOR U-BOLT DETAILS.

DO NOT SCALE
DIMS IN

FOR CONSTRUCTION

ORDER	DRWN	CHKD	AMENDMENT	EXAM	APPD	DATE	ISS
NA28642.01	TE	MB	FOR CONSTRUCTION - 80005689WO224CYI - NR850/NR2600/NR3600	XX	XX	12.08.26	1

CYIENT
Level-14, 333 Collins Street, Melbourne, Victoria 3000 Australia
T +61 3 8605 4815 | www.cyient.com

Telstra

MOBILE NETWORK SITE 288399
BELLA VISTA 29-31 LEXINGTON DR
ANTENNA MOUNTING DETAILS - SHEET 4 OF 4
29-31 LEXINGTON DRIVE, BELLA VISTA, NSW 2153

DWG NO. N109732
SHT NO. T3-17

© Telstra Limited ACN 086 174 781 All rights reserved.

A3V

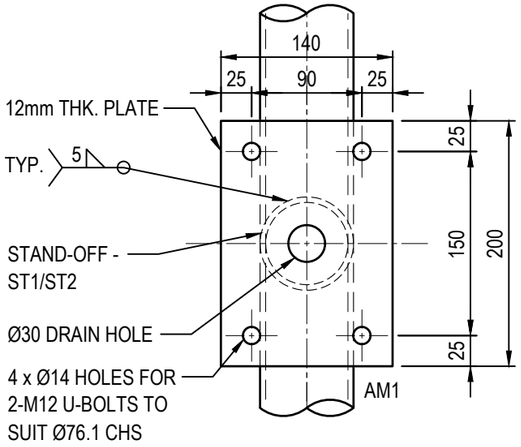

PLATE - PL3
SCALE 1:5

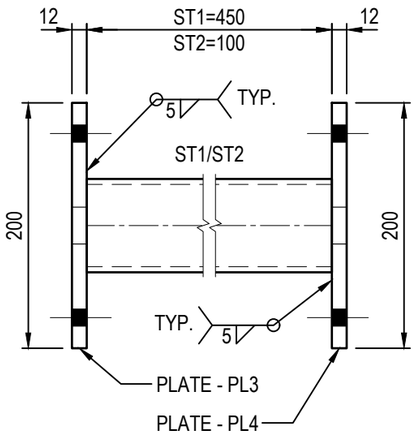

STAND-OFF DETAILS
SCALE 1:5

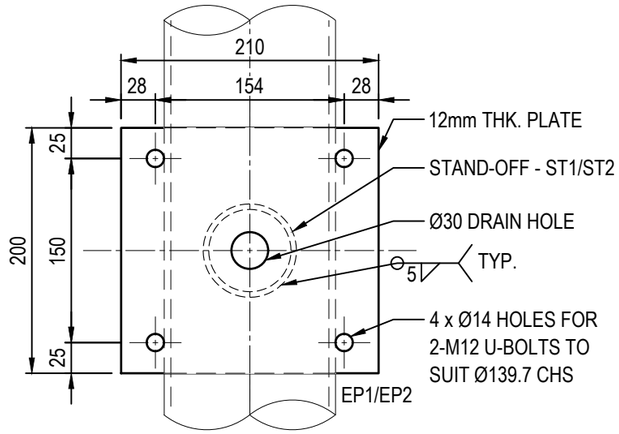

PLATE - PL4
SCALE 1:5

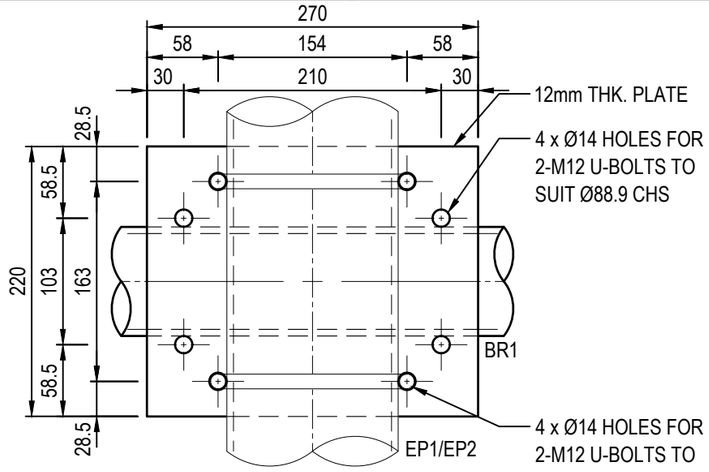

PLATE - PL5
SCALE 1:5

NOTES:

1. ALL UNITS IN MILLIMETERS UNLESS NOTED OTHERWISE.
2. ALL WORKMANSHIP AND MATERIALS SHALL BE IN ACCORDANCE WITH 4100, AS/NZS 1554.1 AND AS/NZS 5131 EXCEPT WHERE VARIED BY THE CONTRACT DOCUMENTS.
3. UNLESS NOTED OTHERWISE, ALL STEEL SHALL BE GRADE 250 FOR PLATES AND FOR CHS.
4. COMMERCIAL GRADE BOLTS SHALL CONFORM TO AS/NZS 1111 AND AS 4100. HIGH STRENGTH STRUCTURAL BOLTS SHALL CONFORM TO AS/NZS 1252 AND AS 4100. WELDS SHALL CONFORM TO AS/NZS 1554.1.
5. ALL DETAILS, GAUGE LINES, ETC., WHERE NOT SPECIFICALLY SHOWN ARE TO BE IN ACCORDANCE WITH AUSTRALIAN STEEL INSTITUTE DESIGN CAPACITY TABLES FOR STRUCTURAL STEEL AND AUSTRALIAN STEEL INSTITUTE STANDARDISED STRUCTURAL CONNECTIONS.
6. ALL WELDS ARE STRUCTURAL PURPOSE (SP) CATEGORY TO AS1554.1
7. UNLESS NOTED OTHERWISE, ALL WELDS SHALL BE 6mm CONTINUOUS FILLET FROM E49XX ELECTRODES. ALL WELDS SHALL BE CATEGORY SP.
8. ALL BOLTS SHALL BE GRADE 8.8/S UNLESS NOTED OTHERWISE.
9. ALL BOLTS AND U-BOLTS TO BE SECURED WITH STANDARD FLAT WASHERS, SPRING WASHERS AND STANDARD NUTS U.N.O.
10. FOR BOLTS OTHER THAN AS NOTED ABOVE, THE FOLLOWING NOTATION IS USED: BOLTS-DESIGNATED BY THE NUMBER, DIAMETER, GRADE AND TIGHTENING PROCEDURE E.G. 2-M16 8.8/S DENOTES 2 NO. M16 COMMERCIAL GRADE BOLTS, SNUG TIGHT. STRUCTURAL STEEL WORK SHALL HAVE THE FOLLOWING SURFACE TREATMENT IN ACCORDANCE WITH AS/NZS 2312.1 & AS/NZS 2312.2 AND THE SPECIFICATION:

ELEMENT	SURFACE CLEANING	PRIME COAT	TOP COATES
EXTERNAL	CLASS 2	HDGALV	-

11. TRIAL ASSEMBLE PRIOR TO HOT DIP GALVANISING.
12. ALL HOT DIP GALVANISED MEMBERS SHALL BE PROVIDED WITH VENT AND DRAINAGE HOLES IN ACCORDANCE WITH THE GALVANISER'S RECOMMENDATIONS.
13. ALL CUT FACES, EDGES, ON SITE DRILLED HOLES AND WELDS TREATED WITH COLD GALV. OR APPROVED EQUIVALENT TO REINSTATE THE GALVANISED LAYER.
14. BEST EFFORTS HAVE BEEN MADE TO PROVIDE ACCURATE STEEL MEMBER QUANTITIES. STEEL FABRICATOR TO VERIFY QUANTITIES DURING SHOP DRAWING PRODUCTION AND ADVISE ENGINEER OF ANY DISCREPANCIES.
15. ANY BOLTS LOOSENED SHALL BE REPLACED WITH PROPOSED BOLTS. REUSE OF EXISTING BOLTS/U-BOLTS IS NOT PERMITTED.

MEMBER SCHEDULE

ITEM No.	ITEM DESCRIPTION
EB1	EXISTING 125 PFC
EB2	EXISTING 75 x 6 SHS
EB3	EXISTING 125 PFC
EB4	EXISTING 75 x 6 SHS
EBR4	EXISTING 65 x 6 EA

MEMBER SCHEDULE

ITEM No.	ITEM DESCRIPTION	Qty.
AM1	PROPOSED ANTENNA MOUNT Ø76.1 x 5.9 THK. CHS - 2800mm LONG	6
ST1	PROPOSED ANTENNA STANDOFF Ø76.1 x 5.9 THK. CHS - 450mm LONG	5
ST2	PROPOSED ANTENNA STANDOFF Ø76.1 x 5.9 THK. CHS - 100mm LONG	5
ST3	PROPOSED ANTENNA STANDOFF Ø76.1 x 5.9 THK. CHS - 100mm LONG	2
ST4	PROPOSED ANTENNA STANDOFF Ø76.1 x 5.9 THK. CHS - 350mm LONG	2
EP1	EXISTING MAIN MOUNT Ø139.7 x 5.4 CHS - 6759mm LONG FOR SECTOR 1	3
EP2	EXISTING MAIN MOUNT Ø139.7 x 5.4 CHS - 7600mm LONG FOR SECTOR 2	3
MP3	PROPOSED MAIN MOUNT Ø165.1 x 5.4 CHS - 2666mm LONG FOR SECTOR 3	2
MP4	PROPOSED MAIN MOUNT Ø165.1 x 5.4 CHS - 2200mm LONG FOR SECTOR 3	2
MP5	PROPOSED MAIN MOUNT Ø165.1 x 5.4 CHS - 1984mm LONG FOR SECTOR 3	2
MP6	PROPOSED EXTENSION MOUNT Ø139.7 x 5.4 CHS - 1500mm LONG FOR SECTOR 2	2
MP7	PROPOSED EXTENSION MOUNT Ø114.3 x 5.4 CHS - 600mm LONG FOR SECTOR 2	2
B5	PROPOSED 125 PFC - 3377mm LONG	2
B6	PROPOSED STANDOFF 75 x 6 SHS - 280mm LONG	4
BR1	PROPOSED HORIZONTAL BRACE Ø88.9 x 5.9 CHS - 2400mm LONG	3
BR2	PROPOSED HORIZONTAL BRACE Ø88.9 x 5.9 CHS - 1400mm LONG	1
BR3	PROPOSED HORIZONTAL BRACE Ø88.9 x 5.9 CHS - 2150mm LONG	3
BR5	PROPOSED DIAGONAL BRACE 75 x 6 EA - 4200mm LONG	2
RM1	PROPOSED RRU MOUNT Ø76.1 x 5.9 THK. CHS - 3200mm LONG	1
UB1	PROPOSED M12 U-BOLTS TO SUIT Ø139.7 CHS. TO FIX EP1/EP2 TO PL4/PL5	42
UB2	PROPOSED M12 U-BOLTS TO SUIT Ø165.1 CHS. TO FIX MP3 TO PL6/PL7/PL9	28
UB3	PROPOSED M12 U-BOLTS TO SUIT Ø76.1 CHS. TO FIX AM1 TO PL3/PL10	32
UB4	PROPOSED M12 U-BOLTS TO SUIT Ø88.9 CHS. TO FIX BR1/BR2/BR4 TO PL5/PL11	38
UB5	PROPOSED M12 U-BOLTS TO SUIT 125PFC TO FIX MP3/MP4 TO PL8	8

UNAPPROVED DRAWING

COMPLIANCE BOX
COMPLETED AS PER DESIGN ☐
ALTERATIONS IN RED ☐
NAME (PRINT)
SIGNATURE DATE

FOR CONSTRUCTION

DO NOT SCALE

NOTE FOR MANUFACTURER & INSTALLER:
TRIAL ASSEMBLE PRIOR TO GALVANISING AND DELIVERY TO SITE TO ENSURE CORRECT FIT AND NUMBER OF PARTS

CYIENT
Level-14, 333 Collins Street, Melbourne, Victoria 3000 Australia
T +61 3 8605 4815 | www.cyient.com

ORDER	DRWN	CHKD	AMENDMENT	EXAM	APPD	DATE	ISS
NA28642.01	TE	MB	FOR CONSTRUCTION - 80005689WO224CYI - NR850/NR2600/NR3600	XX	XX	12.08.26	1

© Telstra Limited ACN 086 174 781 All rights reserved.

Telstra

MOBILE NETWORK SITE 288399
BELLA VISTA 29-31 LEXINGTON DR
ANTENNA STAND-OFF DETAILS
29-31 LEXINGTON DRIVE, BELLA VISTA, NSW 2153

DWG NO. N109732
SHT NO. T3-18

A3

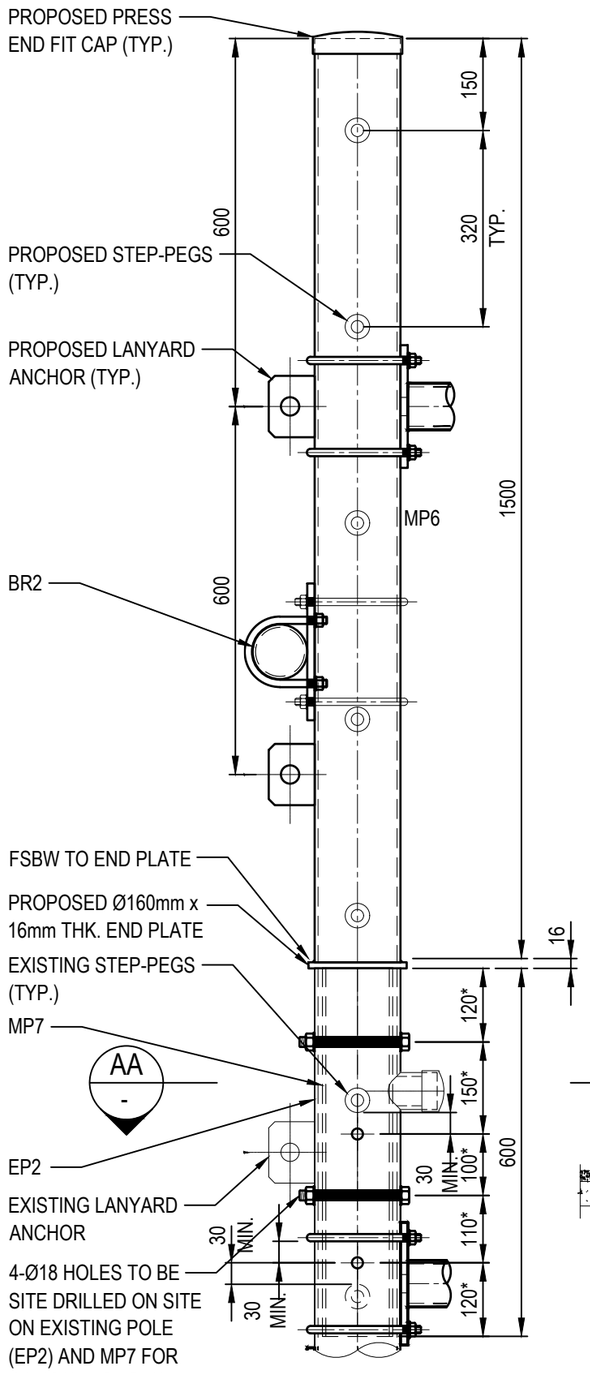

DETAIL 1 / T3-16

SCALE 1:10

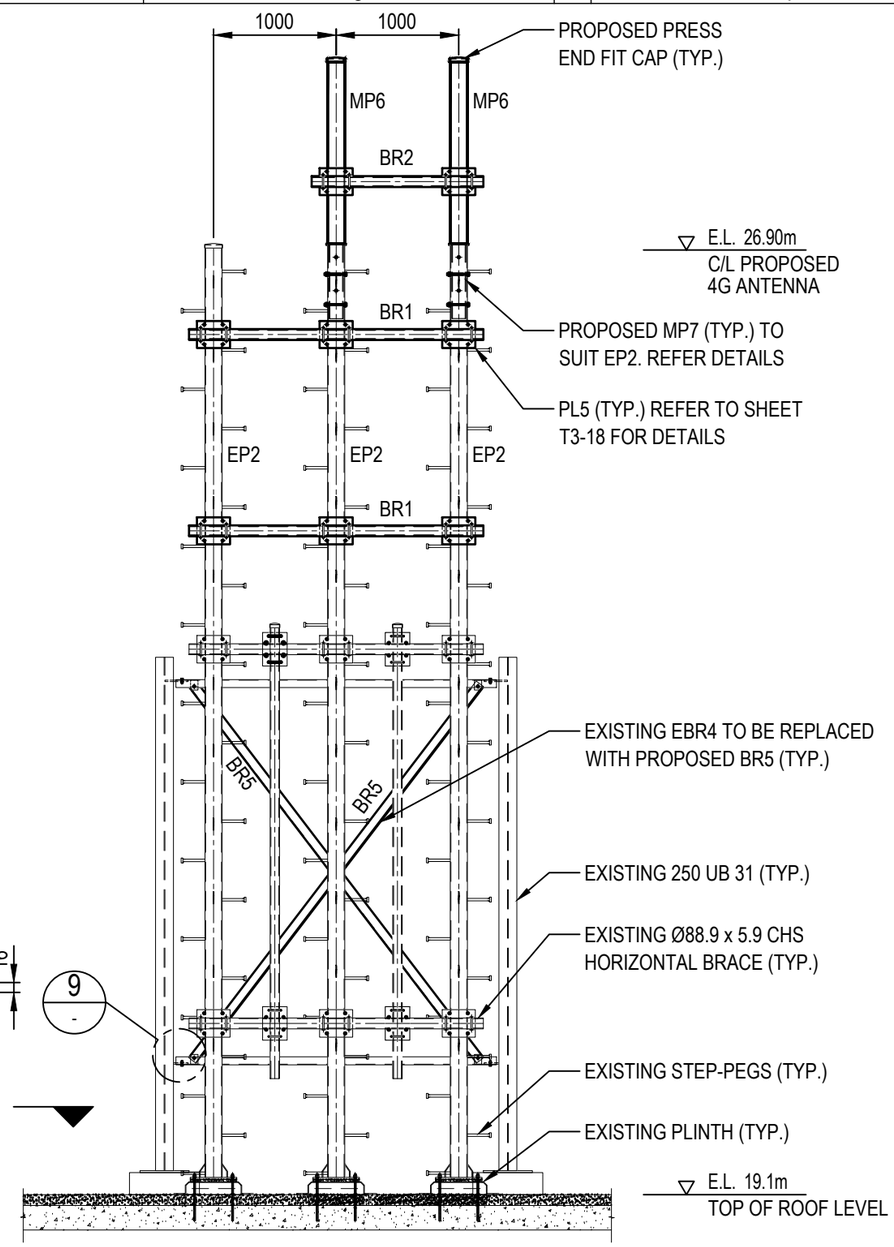

SECTION AA / T3-14

SCALE 1:50

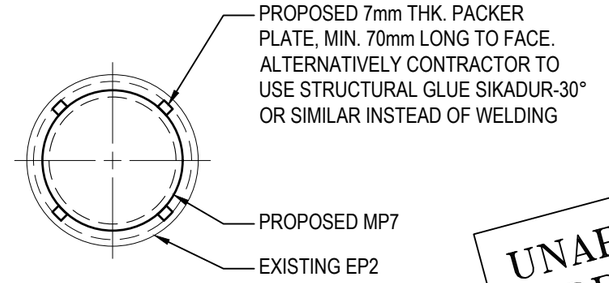

SECTION AA / -

SCALE 1:5

UNAPPROVED DRAWING

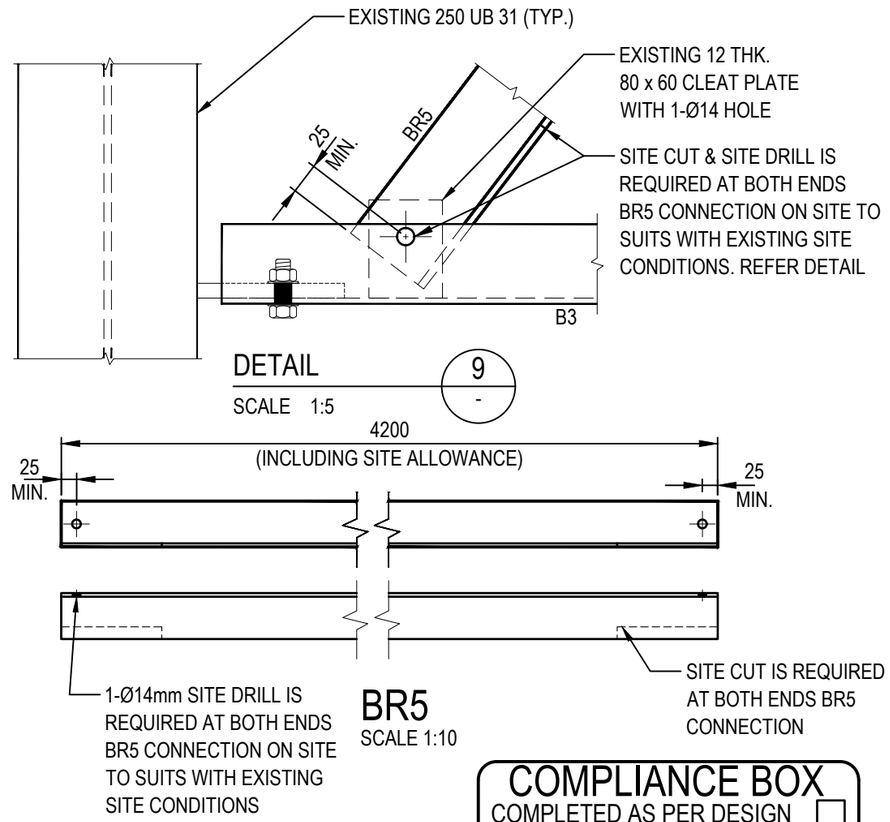

DETAIL 9 / -

SCALE 1:5

BR5

SCALE 1:10

NOTE :

* DENOTES SITE DRILL ON SITE TO AVOID THE CLASHES WITH EXISTING STEP PEGS/ANCHOR PLATE. MAINTAIN MIN 40mm BOTH ENDS & MAINTAIN MIN. 80mm BETWEEN TWO THROUGH BOLTS.

COMPLIANCE BOX

COMPLETED AS PER DESIGN ☐

ALTERATIONS IN RED ☐

NAME (PRINT)

SIGNATURE DATE

FOR CONSTRUCTION

DO NOT SCALE

NOTES:

1. FOR STANDARD CONSTRUCTION NOTES REFER TO TELSTRA STANDARD DRAWING 017866P05.
2. REFER TO SHEET T3-18 FOR STRUCTURAL NOTES AND MEMBER SCHEDULE DETAILS.
3. REFER TO TELSTRA STANDARD DRAWING 017866P70 SHEET 4 FOR U-BOLT DETAILS.

CYIENT
Level-14, 333 Collins Street, Melbourne, Victoria 3000 Australia
T +61 3 8605 4815 | www.cyient.com

ORDER	DRWN	CHKD	AMENDMENT	EXAM	APPD	DATE	ISS
NA28642.01	TE	MB	FOR CONSTRUCTION - 80005689WO224CYI - NR850/NR2600/NR3600	XX	XX	12.08.26	1

© Telstra Limited ACN 086 174 781 All rights reserved.

Telstra

MOBILE NETWORK SITE 288399
BELLA VISTA 29-31 LEXINGTON DR

SECTOR-2 ANTENNA MOUNTING DETAILS
29-31 LEXINGTON DRIVE, BELLA VISTA, NSW 2153

DWG NO. N109732

SHT NO. T3-19

A3

MEMBER SCHEDULE	
ITEM DESCRIPTION	Qty.
4-M16 HILTI HIT-200 INJECTABLE ANCHORS (GR. 8.8) WITH 120mm EFFECTIVE EMBEDMENT INTO EXISTING SLAB TO FIX BASE PLATE INTO PEDESTAL	8
PROPOSED M16 x 180mm LONG THROUGH BOLTS WITH NUT AND WASHER (GR 8.8) TO FIX EP2 TO MP7	8
PROPOSED M16 x 60mm BOLTS WITH NUT AND WASHER (GR 8.8) TO FIX SPLICE PLATE	36
PROPOSED M16 x 240mm LONG THROUGH BOLTS WITH NUT AND WASHER (GR 8.8) TO FIX L-ANGLE TO EXISITNG 200 x 5 CHS	4
PROPOSED M16 x 200mm LONG THROUGH BOLTS WITH NUT AND WASHER (GR 8.8) TO FIX PLATE12 TO PLATE12	8
PROPOSED M16 x 50mm BOLTS WITH NUT AND WASHER (GR 8.8) TO FIX B5 TO PLATE12/L-ANGLE AND FIX BR5 TO EXISTING CLEAT PLATE	8
PROPOSED M16 x 40mm BOLTS WITH NUT AND WASHER (GR 8.8) TO FIX BR5 TO EXISTING CLEAT PLATE)	4

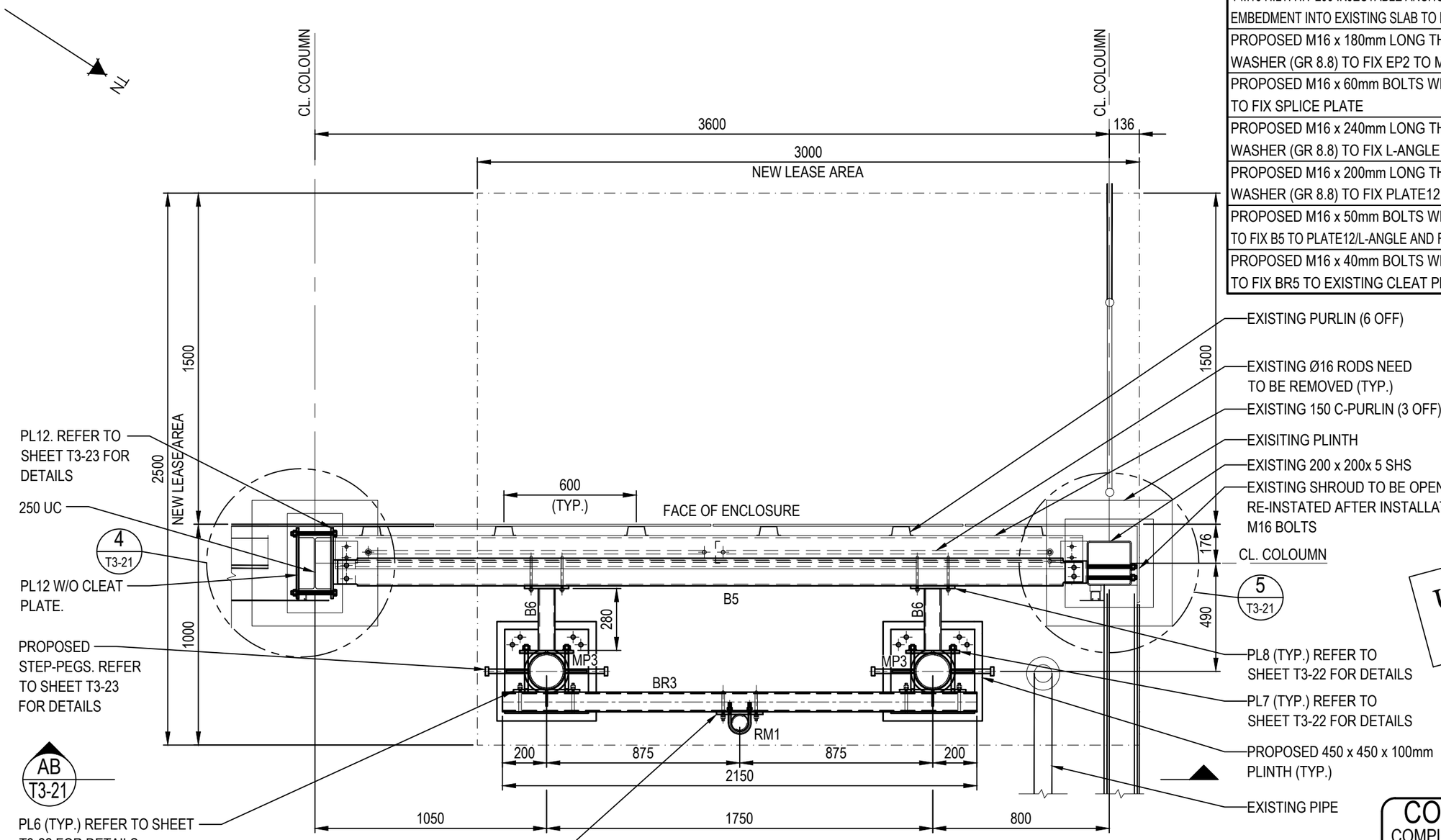

UNAPPROVED DRAWING

SECTOR 3 STEOUT PLAN

SCALE 1:20

COMPLIANCE BOX

COMPLETED AS PER DESIGN ☐

ALTERATIONS IN RED ☐

NAME (PRINT)

SIGNATURE DATE

FOR CONSTRUCTION

DO NOT SCALE

NOTES:

1. FOR STANDARD CONSTRUCTION NOTES REFER TO TELSTRA STANDARD DRAWING 017866P05.
2. REFER TO SHEET T3-18 FOR STRUCTURAL NOTES AND MEMBER SCHEDULE DETAILS.
3. REFER TO TELSTRA STANDARD DRAWING 017866P70 SHEET 4 FOR U-BOLT DETAILS.

CYIENT
Level-14, 333 Collins Street, Melbourne, Victoria 3000 Australia
T +61 3 8605 4815 | www.cyient.com

ORDER	DRWN	CHKD	AMENDMENT	EXAM	APPD	DATE	ISS
NA28642.01	TE	MB	FOR CONSTRUCTION - 80005689WO224CYI - NR850/NR2600/NR3600	XX	XX	12.08.26	1

© Telstra Limited ACN 086 174 781 All rights reserved.

Telstra

MOBILE NETWORK SITE 288399
BELLA VISTA 29-31 LEXINGTON DR

SECTOR-3 ANTENNA MOUNTING DETAILS - SHEET 1 OF 4
29-31 LEXINGTON DRIVE, BELLA VISTA, NSW 2153

DWG NO. N109732 SHT NO. T3-20

A3

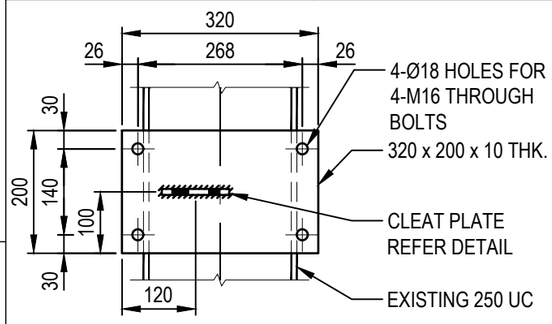

PLATE PL12
SCALE 1:10

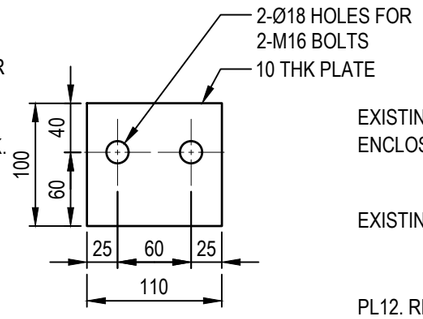

CLEAT PLATE
SCALE 1:5

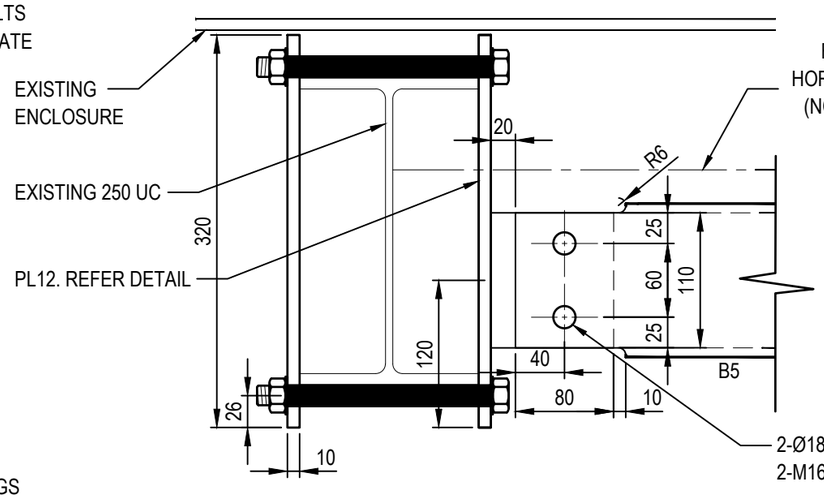

DETAIL 4 / T3-20
SCALE 1:5

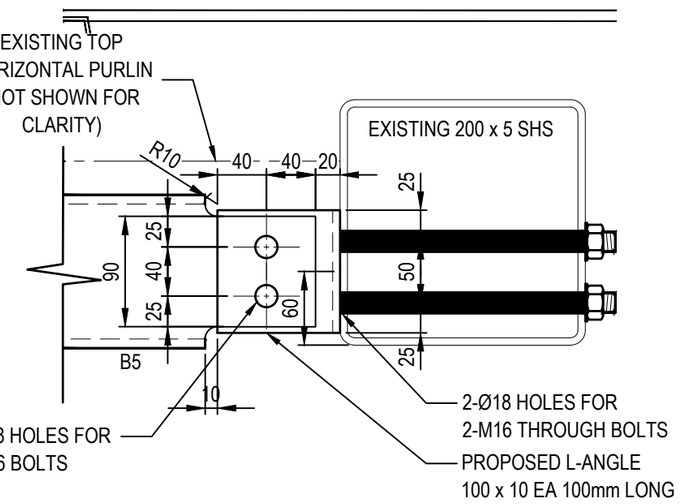

DETAIL 5 / T3-20
SCALE 1:5

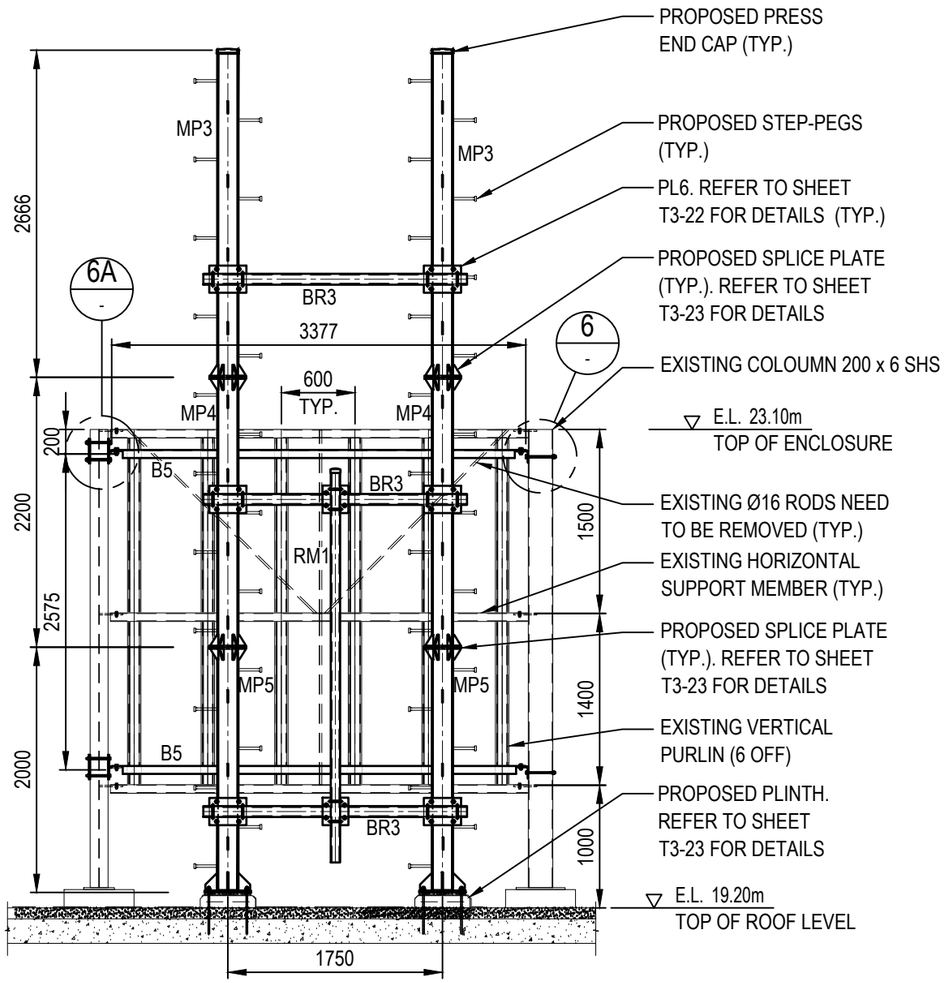

SECTION AB / T3-20
SCALE 1:50

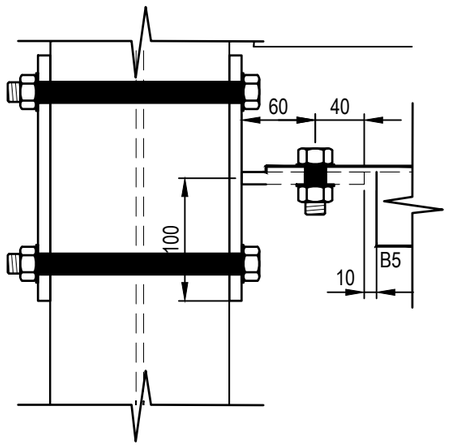

DETAIL 6A / -
SCALE 1:5

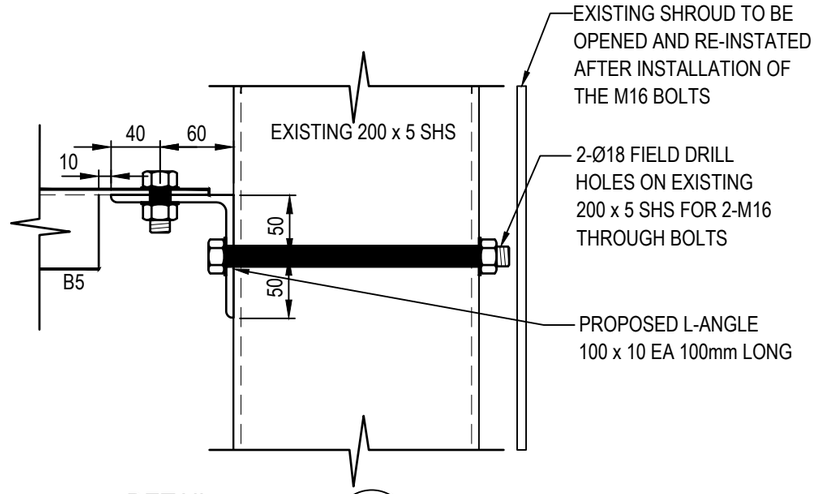

DETAIL 6 / -
SCALE 1:5

UNAPPROVED DRAWING

COMPLIANCE BOX
COMPLETED AS PER DESIGN ☐
ALTERATIONS IN RED ☐
NAME (PRINT)
SIGNATURE DATE

FOR CONSTRUCTION

DO NOT SCALE

NOTES:
1. FOR STANDARD CONSTRUCTION NOTES REFER TO TELSTRA STANDARD DRAWING 017866P05.
2. REFER TO SHEET T3-18 FOR STRUCTURAL NOTES AND MEMBER SCHEDULE DETAILS.
3. REFER TO TELSTRA STANDARD DRAWING 017866P70 SHEET 4 FOR U-BOLT DETAILS.

CYIENT
Level-14, 333 Collins Street, Melbourne, Victoria 3000 Australia
T +61 3 8605 4815 | www.cyient.com

ORDER	DRWN	CHKD	AMENDMENT	EXAM	APPD	DATE	ISS
NA28642.01	TE	MB	FOR CONSTRUCTION - 80005689WO224CYI - NR850/NR2600/NR3600	XX	XX	12.08.26	1

© Telstra Limited ACN 086 174 781 All rights reserved.

Telstra

MOBILE NETWORK SITE 288399
BELLA VISTA 29-31 LEXINGTON DR
SECTOR-3 ANTENNA MOUNTING DETAILS - SHEET 2 OF 4
29-31 LEXINGTON DRIVE, BELLA VISTA, NSW 2153

DWG NO. N109732 SHT NO. T3-21

A3

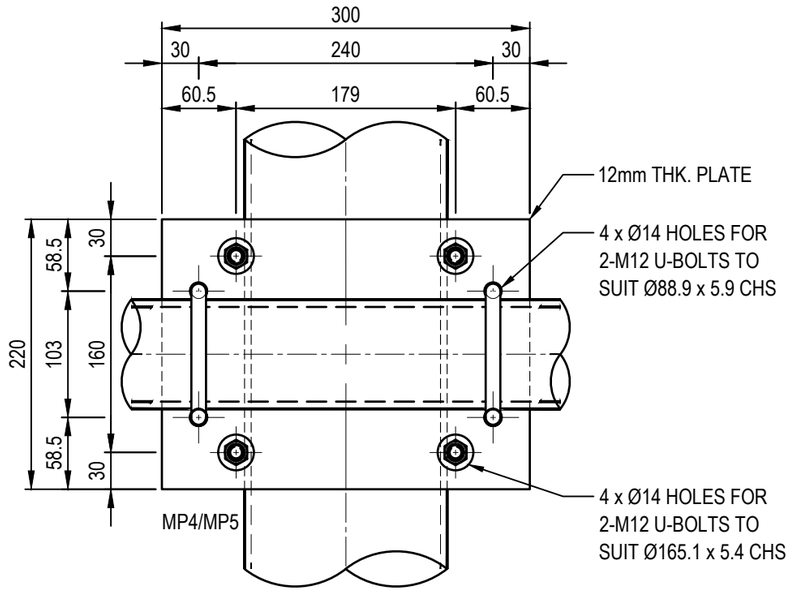

PLATE - PL6
SCALE 1:5

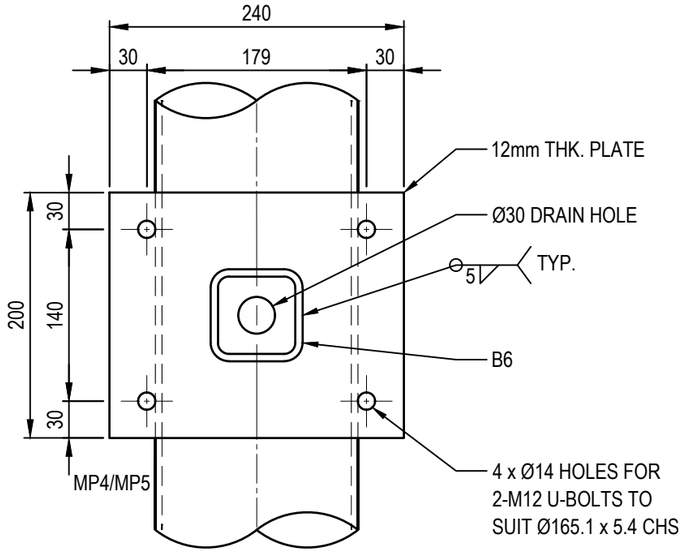

PLATE - PL7
SCALE 1:5

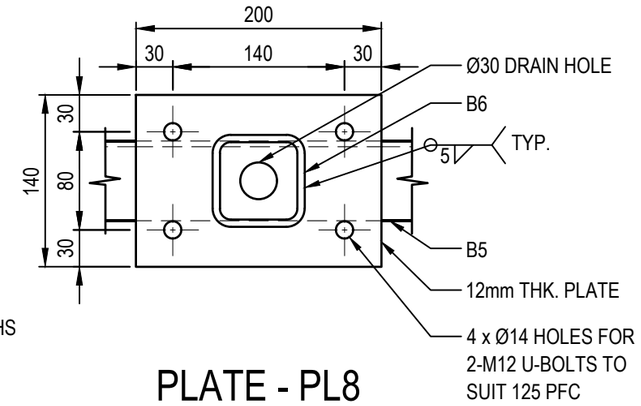

PLATE - PL8
SCALE 1:5

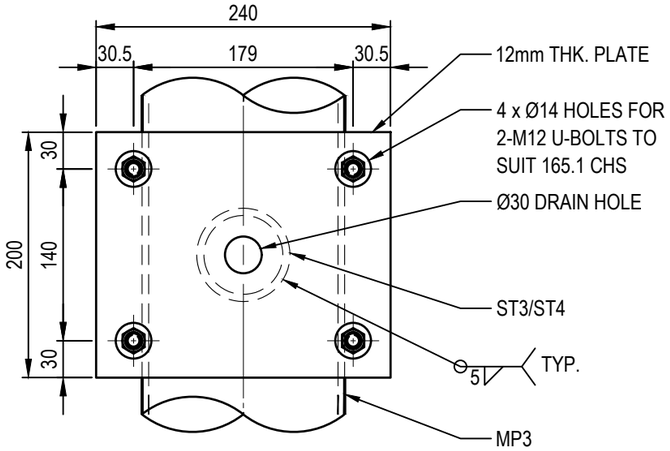

PLATE - PL9
SCALE 1:5

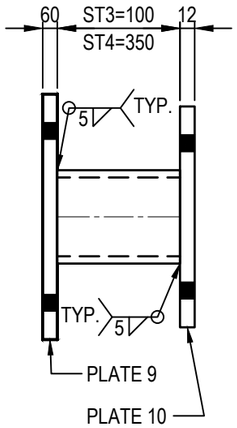

STANDOFF - ST3/ST4
SCALE 1:5

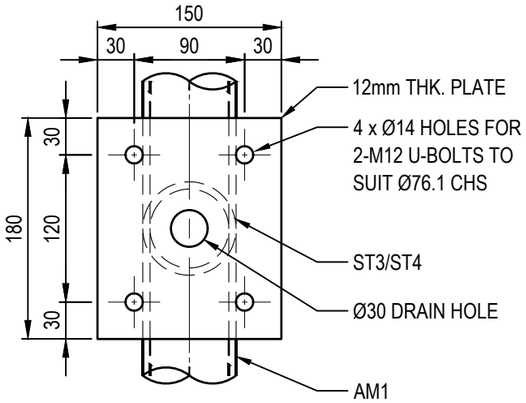

PLATE - PL10
SCALE 1:5

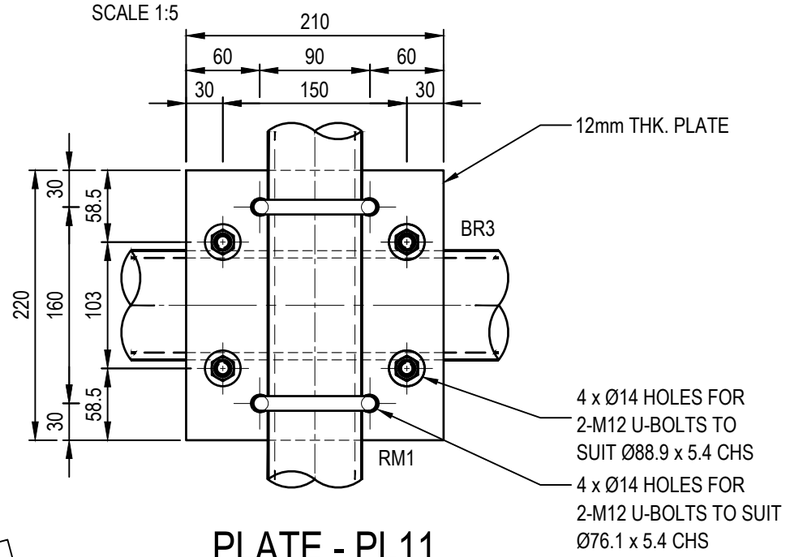

PLATE - PL11
SCALE 1:5

UNAPPROVED DRAWING

COMPLIANCE BOX
COMPLETED AS PER DESIGN ☐
ALTERATIONS IN RED ☐
NAME (PRINT)
SIGNATURE DATE

FOR CONSTRUCTION

DO NOT SCALE

NOTES:
1. FOR STANDARD CONSTRUCTION NOTES REFER TO TELSTRA STANDARD DRAWING 017866P05.
2. REFER TO SHEET T3-18 FOR STRUCTURAL NOTES AND MEMBER SCHEDULE DETAILS.
3. REFER TO TELSTRA STANDARD DRAWING 017866P70 SHEET 4 FOR U-BOLT DETAILS.

CYIENT
Level-14, 333 Collins Street, Melbourne, Victoria 3000 Australia
T +61 3 8605 4815 | www.cyient.com

ORDER	DRWN	CHKD	AMENDMENT	EXAM	APPD	DATE	ISS
NA28642.01	TE	MB	FOR CONSTRUCTION - 80005689WO224CYI - NR850/NR2600/NR3600	XX	XX	12.08.26	1

© Telstra Limited ACN 086 174 781 All rights reserved.

Telstra

MOBILE NETWORK SITE 288399
BELLA VISTA 29-31 LEXINGTON DR
SECTOR-3 ANTENNA MOUNTING DETAILS - SHEET 3 OF 4
29-31 LEXINGTON DRIVE, BELLA VISTA, NSW 2153

DWG NO. N109732 SHT NO. T3-22

A3

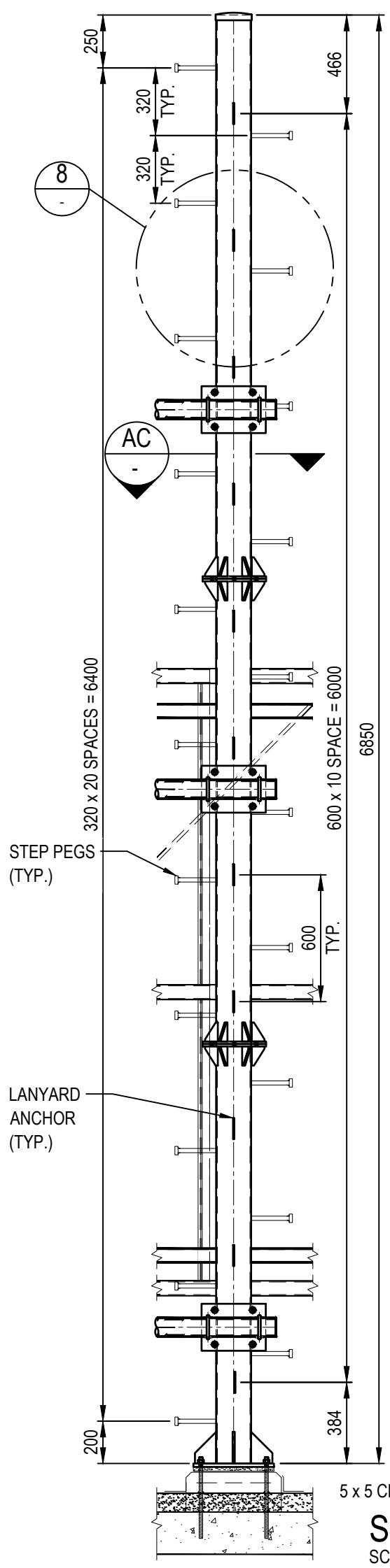

STEP-PEGS AND ANCHOR POINT DETAILS
SCALE 1:25

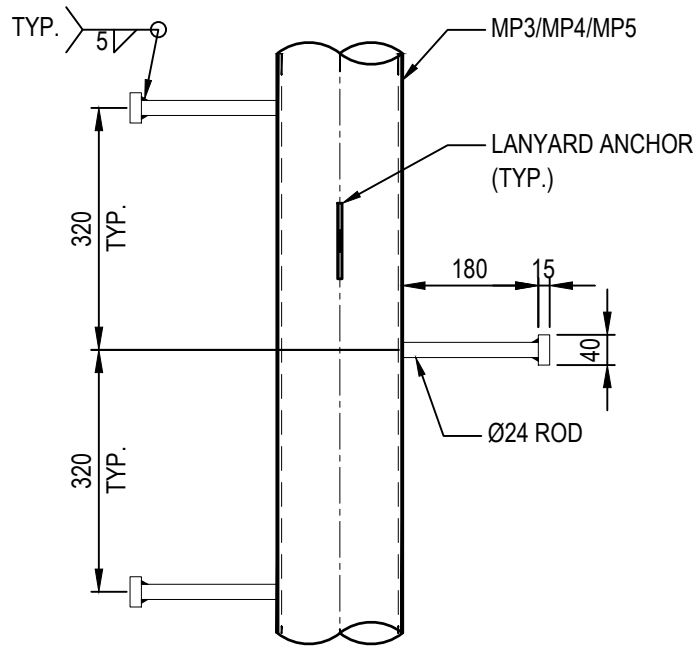

DETAIL 8 / -
SCALE 1:10

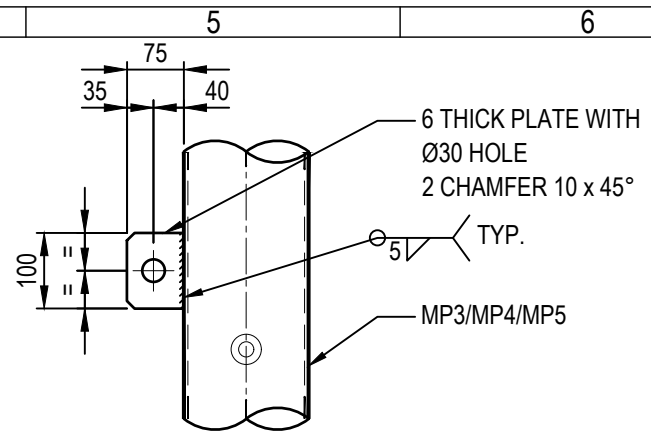

DETAIL 7 / T3-17
SCALE 1:10

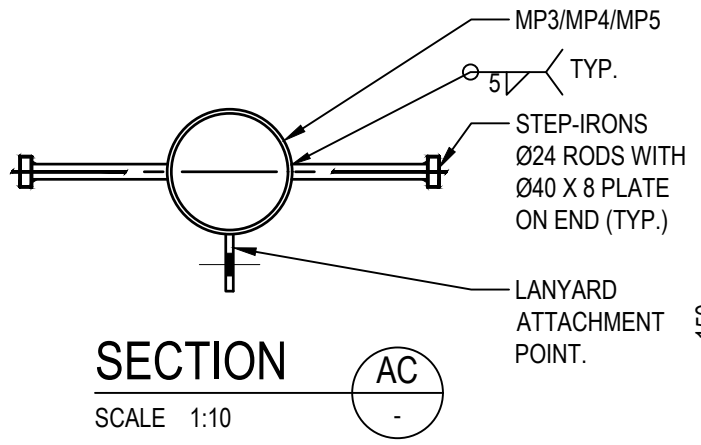

SECTION AC / -
SCALE 1:10

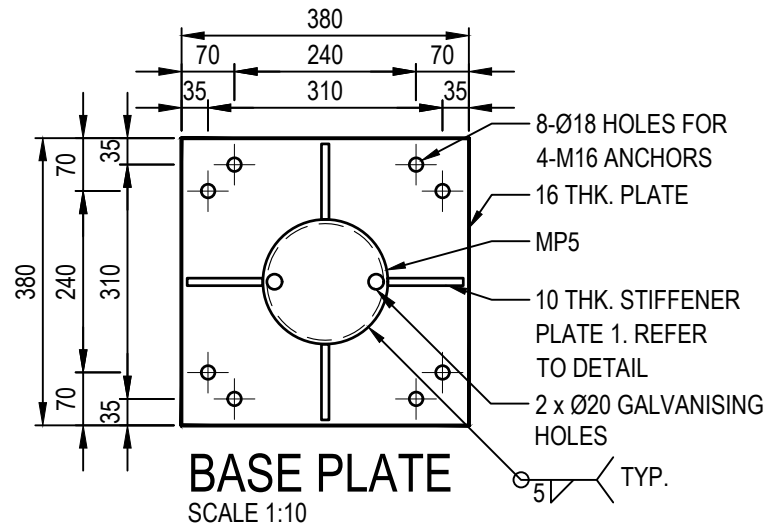

BASE PLATE
SCALE 1:10

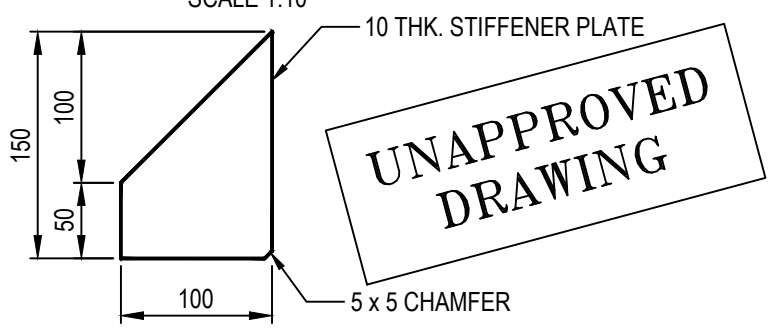

UNAPPROVED DRAWING

STIFFNER PLATE 1 DETAILS
SCALE 1:5

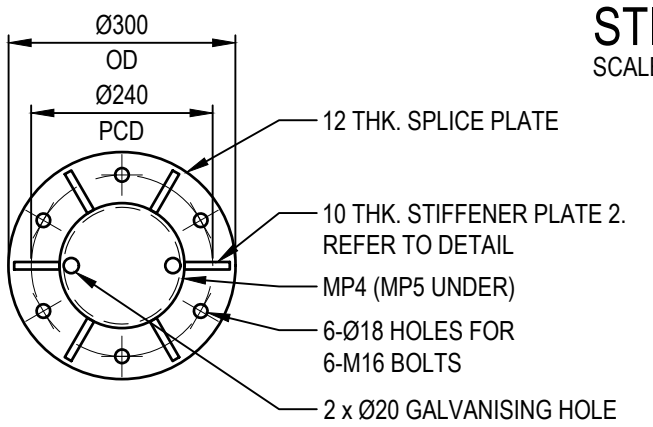

SPLICE DETAILS
SCALE 1:10

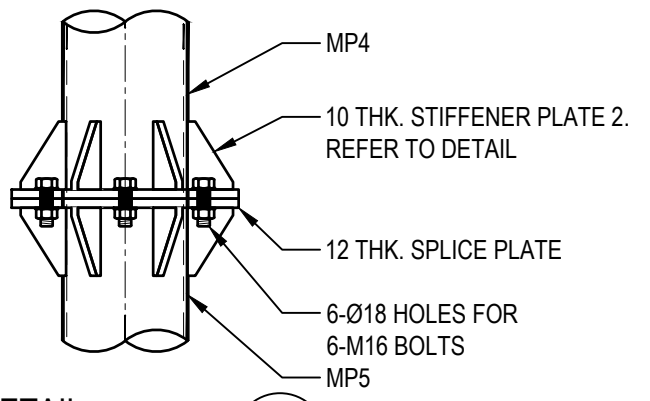

DETAIL 2 / T3-17
SCALE 1:10

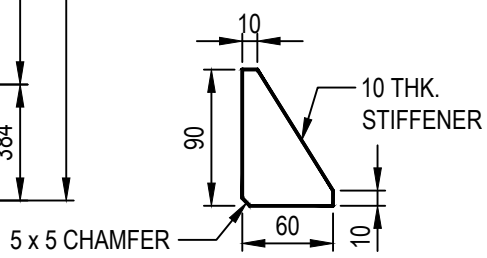

STIFFENER PLATE 2
SCALE 1:5

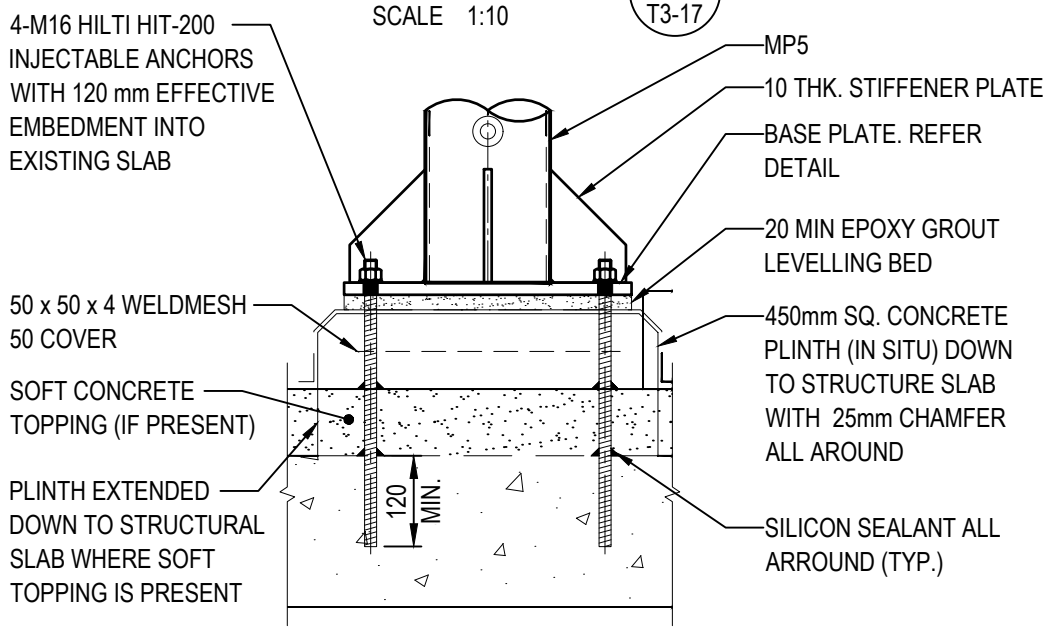

DETAIL 3 / T3-17
SCALE 1:10

NOTES:

1. FOR STANDARD CONSTRUCTION NOTES REFER TO TELSTRA STANDARD DRAWING 017866P05.
2. REFER TO SHEET T3-18 FOR STRUCTURAL NOTES AND MEMBER SCHEDULE DETAILS.
3. REFER TO TELSTRA STANDARD DRAWING 017866P70 SHEET 4 FOR U-BOLT DETAILS.

COMPLIANCE BOX
COMPLETED AS PER DESIGN ☐
ALTERATIONS IN RED ☐
NAME (PRINT)
SIGNATURE DATE

FOR CONSTRUCTION

DO NOT SCALE
DIMS IN

ORDER	DRWN	CHKD	AMENDMENT	EXAM	APPD	DATE	ISS
NA28642.01	TE	MB	FOR CONSTRUCTION - 80005689WO224CYI - NR850/NR2600/NR3600	XX	XX	12.08.26	1

CYIENT
Level-14, 333 Collins Street, Melbourne, Victoria 3000 Australia
T +61 3 8605 4815 | www.cyient.com

Telstra

MOBILE NETWORK SITE 288399
BELLA VISTA 29-31 LEXINGTON DR
SECTOR-3 ANTENNA MOUNTING DETAILS - SHEET 4 OF 4
29-31 LEXINGTON DRIVE, BELLA VISTA, NSW 2153

DWG NO. N109732
SHT NO. T3-23

© Telstra Limited ACN 086 174 781 All rights reserved.

A3V